Centralized Lubrication

CIRVAL S.A.

Pte. Roca 4145 / S2001KDK - Rosario / Santa Fe / Argentine Republic
Tel.: 00-54-341-4655777 (Rotative Lines) Fax: 00-54-341-4658810
E-mail: cirval@cirval.com / Web site: www.cirval.com

INDEX

DUALINE	PAGE.	Version	Date
Distributors			
Model DC	DL-01	2	30/06/04
Model DDC	DL-02	2	30/06/04
Model DCM	DL-03	2	30/06/04
Control Valves		.	.
Model VCI-R1000 Pressure Operated Reversing Valve	DL-04	2	30/06/04
Model VCI-R40 Pressure Operated Reversing Valve	DL-05	2	30/06/04
Model VCI-R10 Solenoid Operated Reversing Valve	DL-06	2	30/06/04
Model VCI-R20 Pressure Operated Reversing Valve	DL-07	2	30/06/04
Model VCAP-3 High Pressure Control Valve	DL-08	2	30/06/04
Model VCA-F Relief Valve with strainer	DL-09	2	30/06/04
Model VCC Air Operated Line Isolating Valve	DL-10	2	30/06/04
Model CU-693-2 Oil Flow Switch	DL-11	2	30/06/04
Model CU-986 Oil Flow Control Valve	DL-12	2	30/06/04
SINGLE LINE PROGRESSIVE		.	.
Distribution Valves		.	.
Model MJ	SLP-01	2	30/06/04
Model MR	SLP-02	2	30/06/04
Model MX	SLP-03	2	30/06/04
Model C-2000	SLP-04	2	30/06/04
Model MU	SLP-05	2	30/06/04
Model MD	SLP-06	2	30/06/04
Model MG	SLP-07	2	30/06/04
SINGLE LINE PARALLEL		.	.
		.	.
Model CFT	UL-01	2	30/06/04
Model CSKN	UL-02	2	30/06/04
Model CUL	UL-03	2	30/06/04
Model CVCR	UL-04	2	30/06/04
Model CLS1	UL-05	2	30/06/04
Model CLS11	UL-06	2	30/06/04
Model CVA 850	UL-07	2	30/06/04
		.	.
CENTRAL PUMPING STATIONS		.	.
BCE-DJ4 and BCE-DJ5 Pump Sub-Assembly	BC-01	2	30/06/04
Model ECB-DC-42 Pump Station	BC-02	2	30/06/04
BCE-DJ25 Pump Sub-Assembly	BC-03	2	30/06/04

Model ECB-DC-25 Pump Station	BC-04	2	30/06/04
BCE-DJ10 Pump Sub-Assembly	BC-05	2	30/06/04
Model ECB-DC-10 Pump Station	BC-06	2	30/06/04
Model BCM-A1-A/B Manual Pump	BC-07	2	30/06/04
BCMSL Manual Pump	BC-08	2	30/06/04
BCN/BCH Pneumatic / Hydraulic Operated Pump	BC-09	2	30/06/04
ECB-AC/CT-TP Pump Station	BC-10	2	30/06/04
ECB-AC/CT-P/N Pump Station	BC-11	2	30/06/04
ECB-AC-3 Pump Station	BC-12	2	30/06/04
BCE-JR Pump Sub-Assembly	BC-13	2	30/06/04
BCE-JE Pump Sub-Assembly	BC-14	2	30/06/04
BCE-JE/JR-3 Pump Station	BC-15	2	30/06/04
BCE-JE/JR-15/25 Pump Station	BC-16	2	30/06/04
ECB-JE-LS Pump Station	BC-17	2	30/06/04
ECB-EM Pump Station	BC-18	2	30/06/04
ECB-EF Pump Station	BC-19	2	30/06/04
EBC-VA Pumping Element	BC-20	2	30/06/04
Model BCN-219/221 Pneumatic Operated Pump	BC-21	2	30/06/04
Model BCN 85 Pneumatic Operated Pump	BC-22	2	30/06/04
Pneumatic Operated Booster Pump	BC-23	2	30/06/04
BCE CV Pump with adjustable discharge	BC-24	2	30/06/04
Cable Lubricator LCC	BC-25	2	30/06/04

ACCESSORIES

Connector CU-81/CU-83.....Union CU-84	A-01	2	30/06/04
Elbow CU-87/CU-1103	A-02	2	30/06/04
Elbow CU-1104.....CU-1105	A-03	2	30/06/04
Reducing Bush CU-104.....Nipple CU-151....Serie CU-431	A-04	2	30/06/04
Plugs CU-86/CU-119/CU-2986	A-05	2	30/06/04
Anchor Block CU-1927.... Bleed Screw PC.... TE Serie CU-137	A-06	2	30/06/04
Connection Block CU-1008/CU-1080-B1	A-07	2	30/06/04
Relief Valves CU-962-B / CU-1975-B1 / CU-1997-B1	A-08	2	30/06/04
Check Valves CU-1987-A1/CU-887-D2/CU-1087-B2/CU-2087-B	A-09	2	30/06/04
Rotating Connectors CU-990/CU-989-T/CU-994	A-10	2	30/06/04
Point Applicators PGC-1.....Brushes CLC-C/CLC-P	A-11	2	30/06/04
Filters TF-0/TF-1/TF11	A-12	2	30/06/04
Filters TF-2/FCSL-3/8	A-13	2	30/06/04
Tube Clips CU-301/CU-1301	A-14	2	30/06/04
One Way Couplings CU-967/CU-968/CU-969	A-15	2	30/06/04
Spray Valve VCCS-S1/VCCS-S1-I...Block CSMP...Nozzle CU-992-C	A-16	2	30/06/04

TUBES VARIOUS
SPECIAL Products
THE COMPANY

Dualine

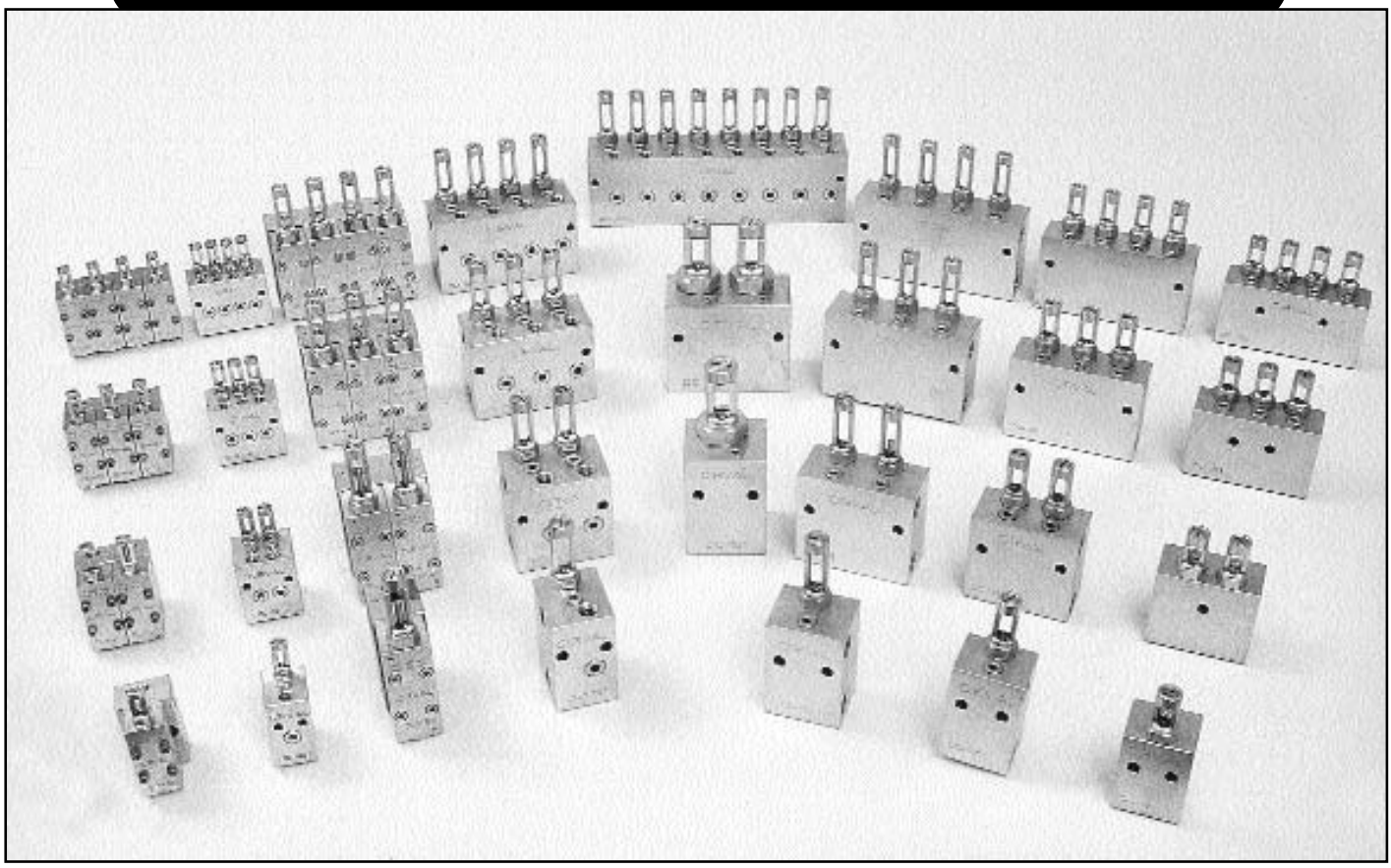

Dualine Valves
DC Series

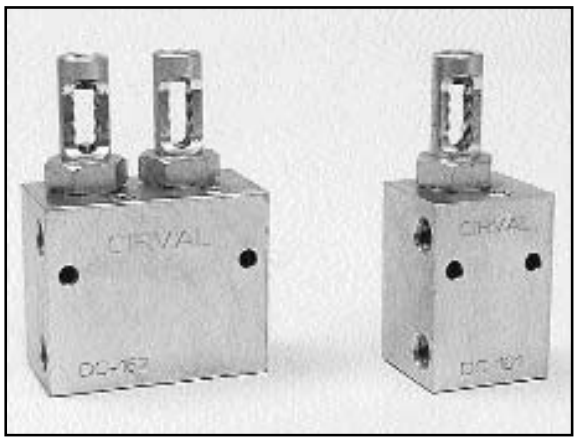

Description

DC valves operate completely hydraulically and can be used either with grease or oil dual line systems.
In these valves, each section can lubricate only one point. Available with 1 to 4 outlets. One important feature of these valves is the absence of retention valves and that they have only one moving part, giving a very positive functioning and facilities to regulate the flow.

Specifications

Lubricant	Oil or grease up to NLGI 2 grade.
Work pressure	Máx.: 250 bar - Mín.: 15 bar
Temperature	Máx.: 80 ºC - Mín.: 0 ºC
Discharge	Adjustable (See model in the table below)

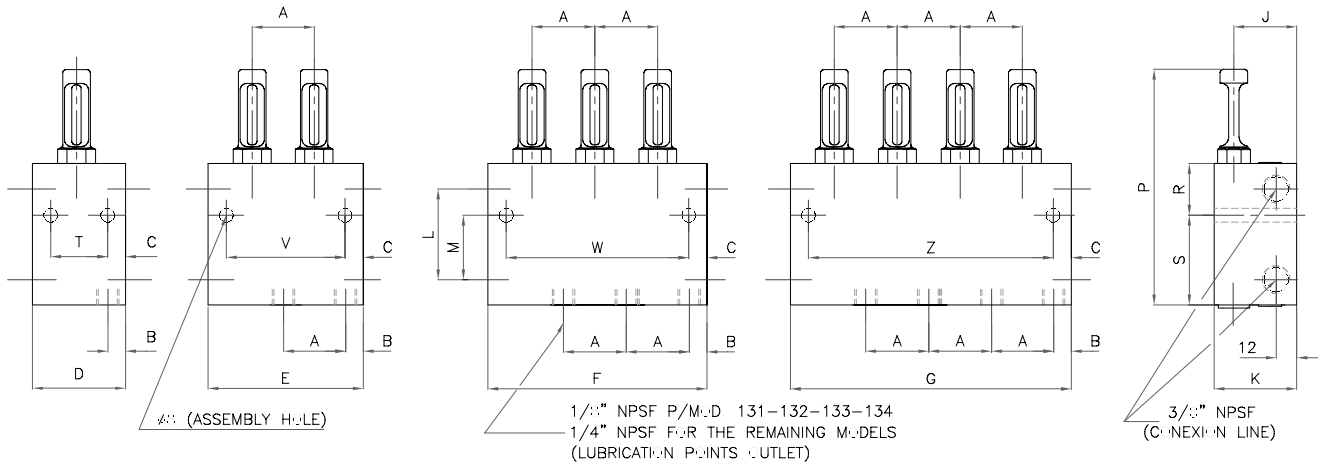

DC-131
DC-141
DC-151
DC-161

DC-132
DC-142
DC-152
DC-162
DC-162-101*

DC-133
DC-143
DC-153

DC-134
DC-144
DC-154

DC 162-101 distributors are available with internal perforation unifying both discharges in only one, duplicating the flow of the last one.

Model	A	B	C	D	E	F	G	J	K	L	M	P	R	S	T	V	W	Z
DC-131		8,2	10,5	45				28	38	41	27,7	100,5	24,5	39	24			
DC-132-133-134	28,5	8,2	36,5		73	102	130	28	38	41	29,2	100,5	23	40,5			29	57
DC-141-142-143-144	31,8	8,2	10,7	48	80	111,5	143,	30	40	55,5	38,2	120	27,5	48,5	27	59	90,5	122
DC-151-152-153-154	36,6	10,2	10,5	54	90	127	4	33	44	55,5	37,2	138	30	52	33	69	106	142
DC-161-162	46	10,5	10,5	62	108		163	37	57	56	41	152,5	32	58	41	87		

Flow regulation per outlet (cm³)

Regulation	MODEL				
	DC-130	DC-140	DC-150	DC-160	DC-162-101
MIN.	0,40	1,10	2,40	5,90	10,80
MAX.	2,40	4,40	10,00	25,00	50,00

Requirement code

DC 1 ☐ ☐

Model	
30	3
40	4
50	5
60	6

Nº outlet	
One salida	1
Two salidas	2
Three salidas	3
Four salidas	4

Order examples: DC-131

Dualine Valves
DDC Series

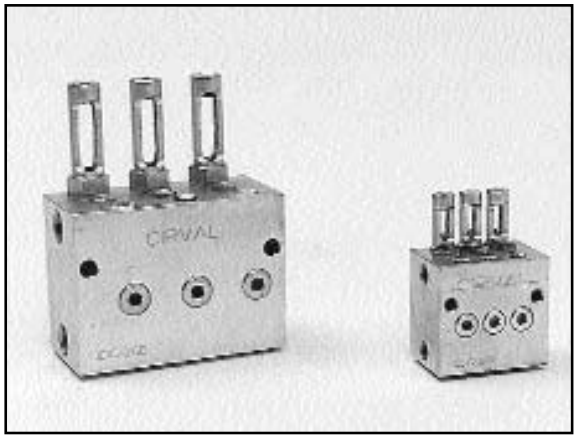

Description

DDC valves operate completely hydraulically and can be used either with grease or oil dual line systems.
The dosage valve can feed 1 or 2 points of lubrication. Available with 2,4,6 or 8 outlets. Nevertheless, through a simple method, the discharge can be unified, converting the dual outlet of a valve in a simple one (through a cross porting) duplicating in this way also the capacity of discharge of the dosimeter.
One important feature of these valves is the absence of retention valve and that they have two moving parts, giving a very positive functioning and facilities to regulate the flow.

Specifications

Lubricant	Oil or grease up to NGLI 2 grade
Work pressure	Máx.: 250 bar - Mín.: 15 bar
Temperature	Máx.: 80 ºC - Mín.: 0 ºC
Discharge	Adjustable (See model in the table below)

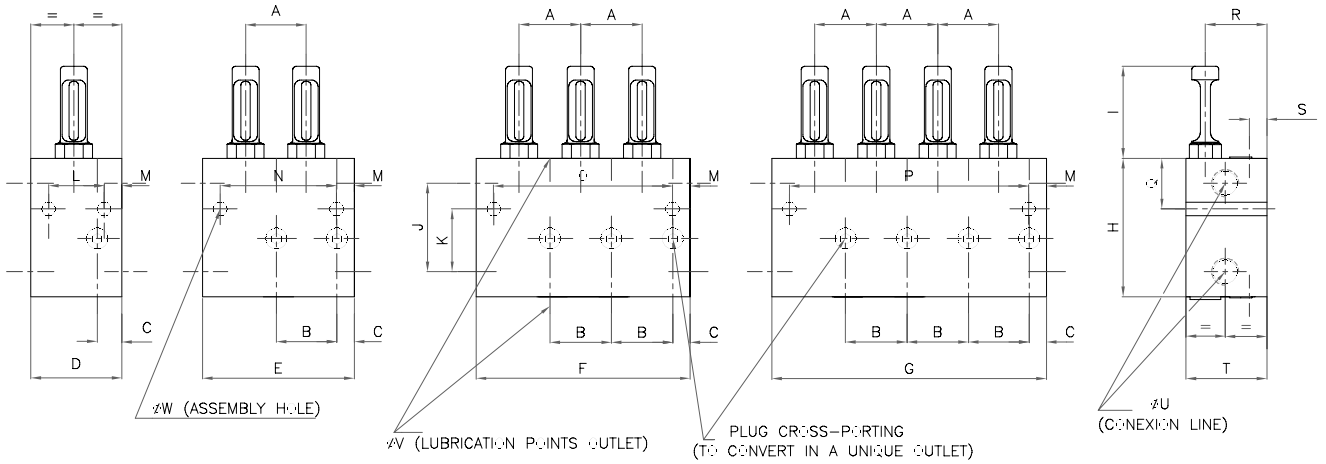

DDC-222
DDC-232
DDC-242
DDC-252

DDC-224
DDC-234
DDC-244
DDC-254

DDC-226
DDC-236
DDC-246
DDC-256

DDC-228
DDC-238
DDC-248
DDC-258

Model	A	B	C	D	E	F	G	H	I	J	K	L	M	N	O	P	Q	R	S	T	U	V	W
DCC-220	14,3	14,3	14,3	28,6	42,9	57,2	71,4	53,9	27,8	38,1	26,9	15,9	6,35	30,2	44,5	58,7	19,05	30,2	7,5	38,1	R-NPSF 1/8"	R-NPSF 1/8"	ø6
DCC-230	31,8	31,8	15,6	44	76	108	140	79	37	57	41	30	7	62	94	126	27	42	11,5	53,5	R-NPSF 3/8"	R-NPSF 3/8"	ø8
DCC-240									44														
DCC-250									56														

Flow regulation per outlet (cm³)

Regulation	MODEL (double outlet)			
	DDC-220	DDC-230	DDC-240	DDC-250
MIN.	0,09	0,20	0,50	0,60
MAX.	0,60	1,20	2,20	5,00
	MODEL (single outlet)			
MIN.	0,18	0,40	1,00	1,20
MAX.	1,20	2,40	4,40	10,00

Requirement code

DDC | 2 | ☐ | ☐

Model	
20	2
30	3
40	4
50	5

Nº outlet	
two outlet	2
four outlet	4
six outlet	6
eight outlet	8

Example Order: DDC-234

Dualine Valves
DCM Series

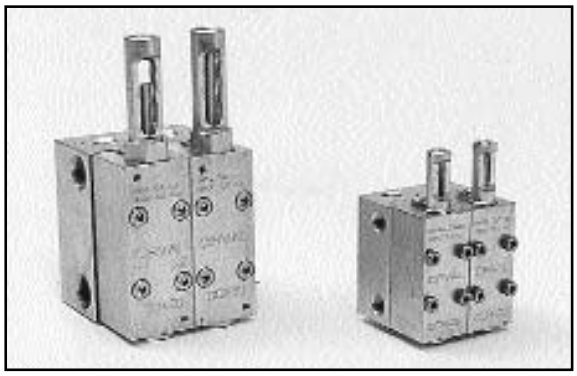

Description

DCM series dualine valves are designed to simplify planning,installation,maintanance and to reduce inventory cost for user of lubrication system.This is achieved by using a modular type valve section which is mounted on a machined base.Standard basis can hold from 1 to 4 modular type valve sections.DCM series dualine valves operate in a hydraulic manner and can be used with either oil or grease in dualine systems.Each modular type valve section lubricates two lubrication points.The DCM series dualine valves are available from 1 to 8 outlets. Using the DCM series dualine valve ensures that each lubrication point received lubricant every alternative cycle of the system operation.No no-return valves are used.Each modular type valve section has two moving parts,a pilot piston which directs the flow of lubricants and an adjustable discharge piston which discharges lubricant to the lubrication point.Each valve section normally has a packing gland assembly with viton seal in which an indicator pin moves.By means of a cross porting facility in the base the two discharge lines from the modular type valve section can be combined into one.The modular construction allows replacement of modular valve section without loosening the lubricant supply or delivery lines.

Flow regulation per outlet (cm^3)

Regulation	MODEL (Double Outlet)		
	DCM-220	DCM-230	DCM-250
MIN.	0,09	0,20	0,60
MAX.	0,60	1,20	5,00
Regulation	MODEL (Single Outlet)		
MIN.	0,18	0,40	1,20
MAX.	1,20	2,40	10,00

Specifications

Lubricant	Oil or grease up to NGLI 2 grade
Work pressure	Máx.: 250 bar - Mín.: 15 bar
Temperature	Máx.: 80 ºC - Mín.: 0 ºC
Discharge	Adjustable (See model in the table below)

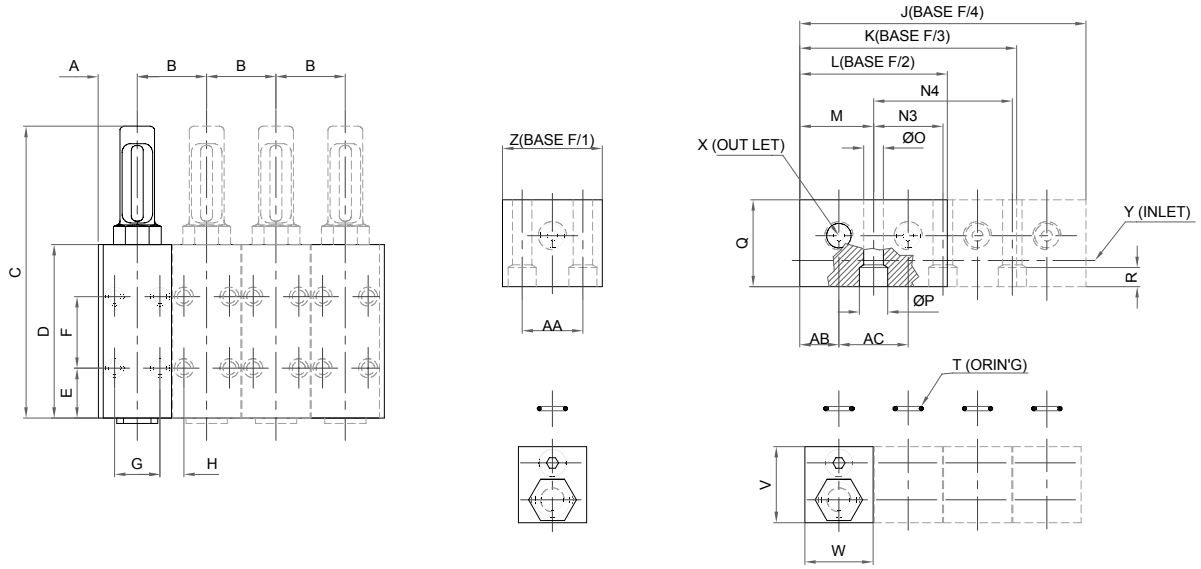

Model	A	B	C	D	E	F	G	H	J	K	L	M	N3	N4	O	P	Q	R	S	T	U	V	W	X	Y	Z	AA	AB	AC
DCM-20	13	26	85	57	18	21	18	8	104	78	52	26	26	52	5	10	25,4	6,5	25,4	O'RING 2-011		25,1	25,4	NPSF1/8"	NPSF1/8"	36	22	13	26
DCM-30	18	32	117	80	23,5	33	21	11	132	100	68	34	32	64	9	13	40	10	31	O'RING 2107		35	31,5	NPSF1/4"	NPSF3/8"	48	28	18	32
DCM-50			135																										

Requirement code - Distributor

DCM | 2 | ☐ ☐ ☐

Size	
20	2
30	3
50	5

Nº outlet	
Two outlets	2
Four outlets	4
Six outlets	6
Eight outlets	8

Example Order : DCM-254

Part Number for Base

Module DCM | ☐ ☐ ☐

Size
20
30
50

Example Order: Module DCM-20

Reversing Valve
Model VCI-R1000

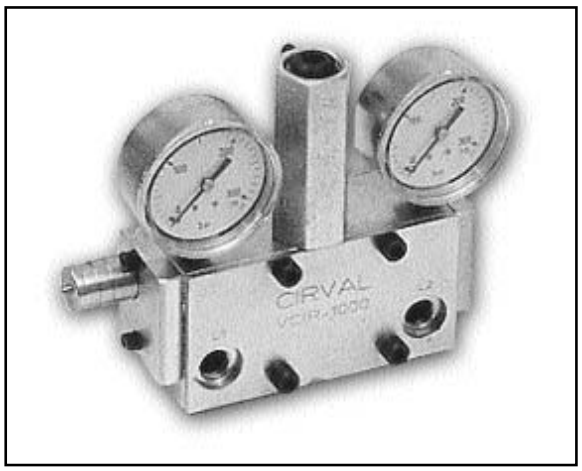

Description

These reversing valves can be activated by system pressure and adjustable-between 35 bar and 140 bar.
The model VCI-R1000 reversing valve is used independent pumps in small dual line systems.

Specifications

Lubricant	Oil or grease up to NGLI 2 grade
Work oressure	Mín.: 35 bar - Máx.: 140 bar
Temperature	Mín.: 0 ºC - Máx.: 80 ºC
Materials	Body and pistons : Steel Seal : Acrilo Nitrilo

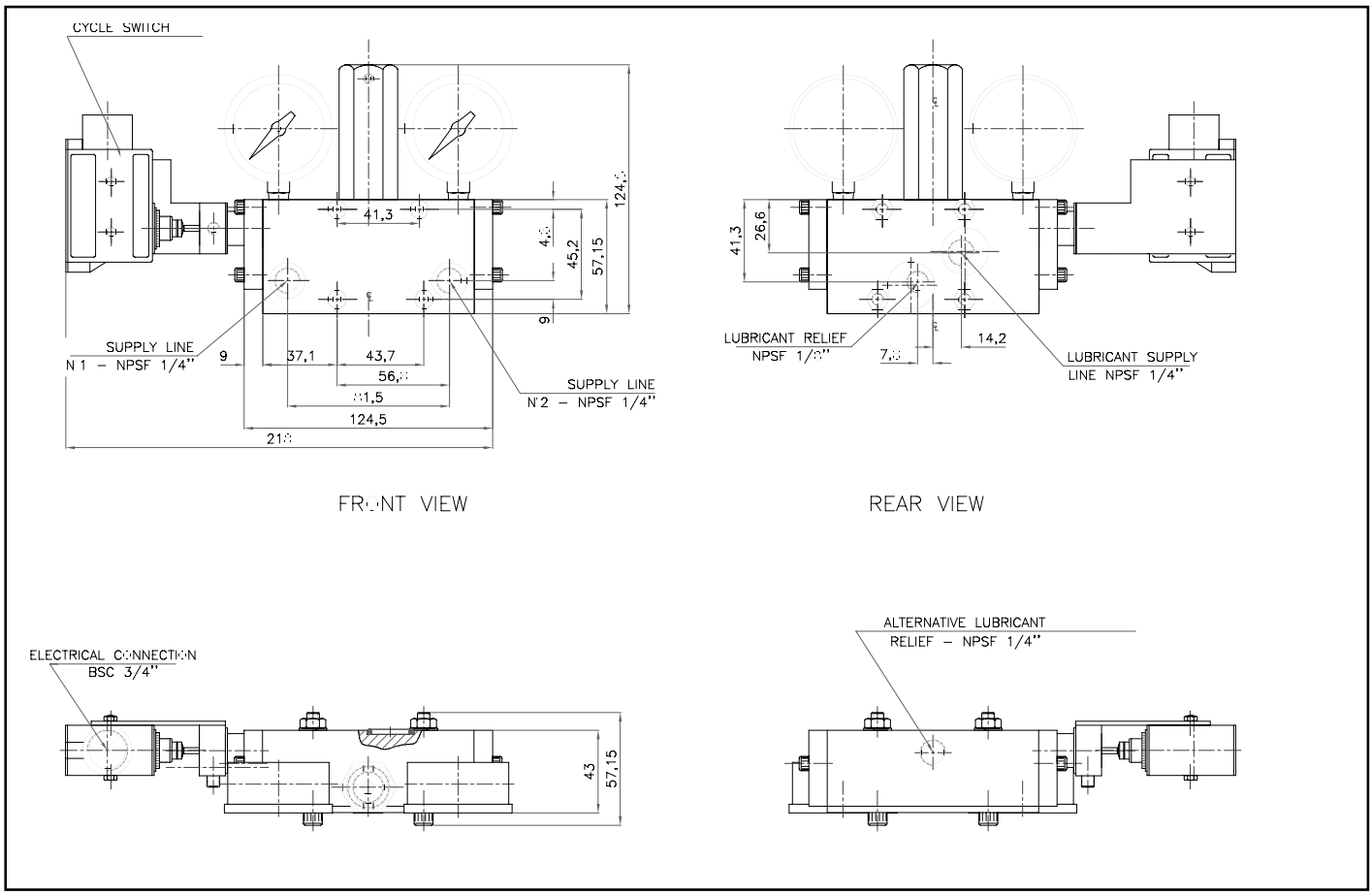

Example Order: VCIR-1000-B-1

Reversing valve Mod. VCIR-1000 for oil with manometers

Requirement code

VCI-R1000 ☐ ☐ ☐

Lubricant	
Grease	A
Oil	B

Manometers	
with manometers	1
without manom	-

Adaptor and Microinterruptor	
with adap. & microint.	2
without ad. & microint.	-

Reversing Valve
Model VCI-R40

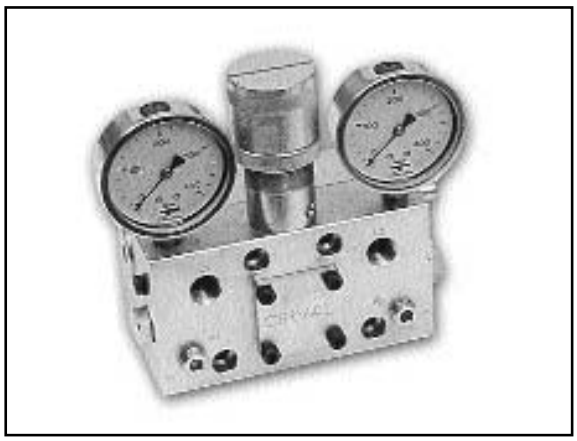

Description

These reversing valves are activated through system pressure. They control non-return and return systems.The VCI-R40 reversing valve is suitable for electric motor driven,pneumatic or hydraulic operated pump units.This reversing valve is used on medium and large dualine systems.

Specifications

Lubricant	Oil or grease up to NLGI 2 grade
Work pressure	Mín.: 35 bar - Máx.: 250 bar
Temperature	Mín.: 0 ºC - Máx.: 80 ºC
Materials	Body and pistons : Steel Seal : Vitón

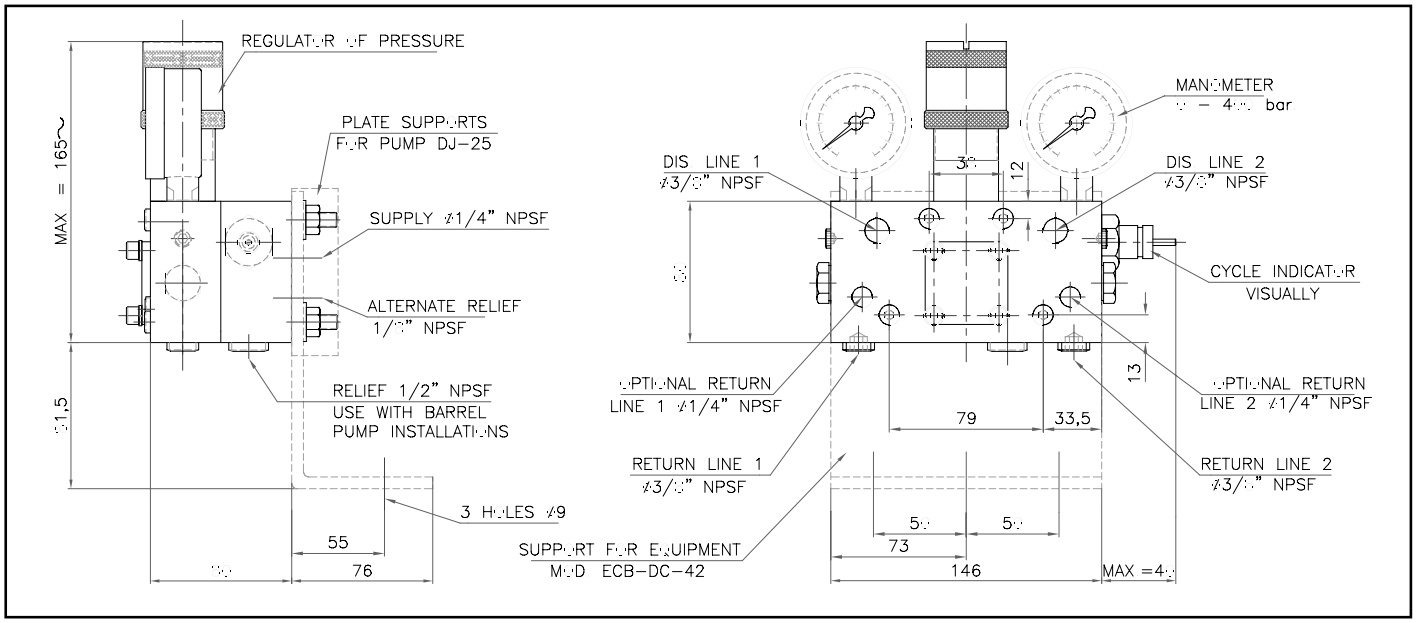

Requirement code

VCI-R40 ☐ ☐ ☐ ☐

Lubricant	
Grease	A
Oil	B

Manometers	
With manometers	1
Without manom.	-

Adaptor and Microinterruptor	
With adap. & micro. right	2
With adaptor & micro. left	4
Without adap. & microint.	-

Assembly base	
With assembly base	3
Without assembly base	-

Order examples: VCIR-40-A-1-4-3

Reversing valve VCIR-40 to be used with grease available with manometers adaptor and microinterruptor and assembly base.

Reversing Valve
Model VCI-R10

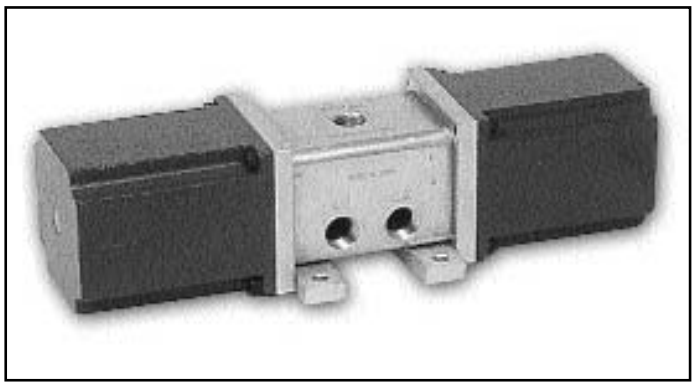

Description

The model VCI-R10 reversing valve operates in conjuction with pressure switches installed in the two lubricant supply lines.These reversing valves are used in end-of-line type dualine lubrication systems. They can be used with electric motor driven,pneumatic or hydraulic operated pumps.

Specifications

Max. range of flow	37,5 L./min.
Work pressure	350 bar
Current of displacement	17,5 amp.
Current of retention	1.65 amp.

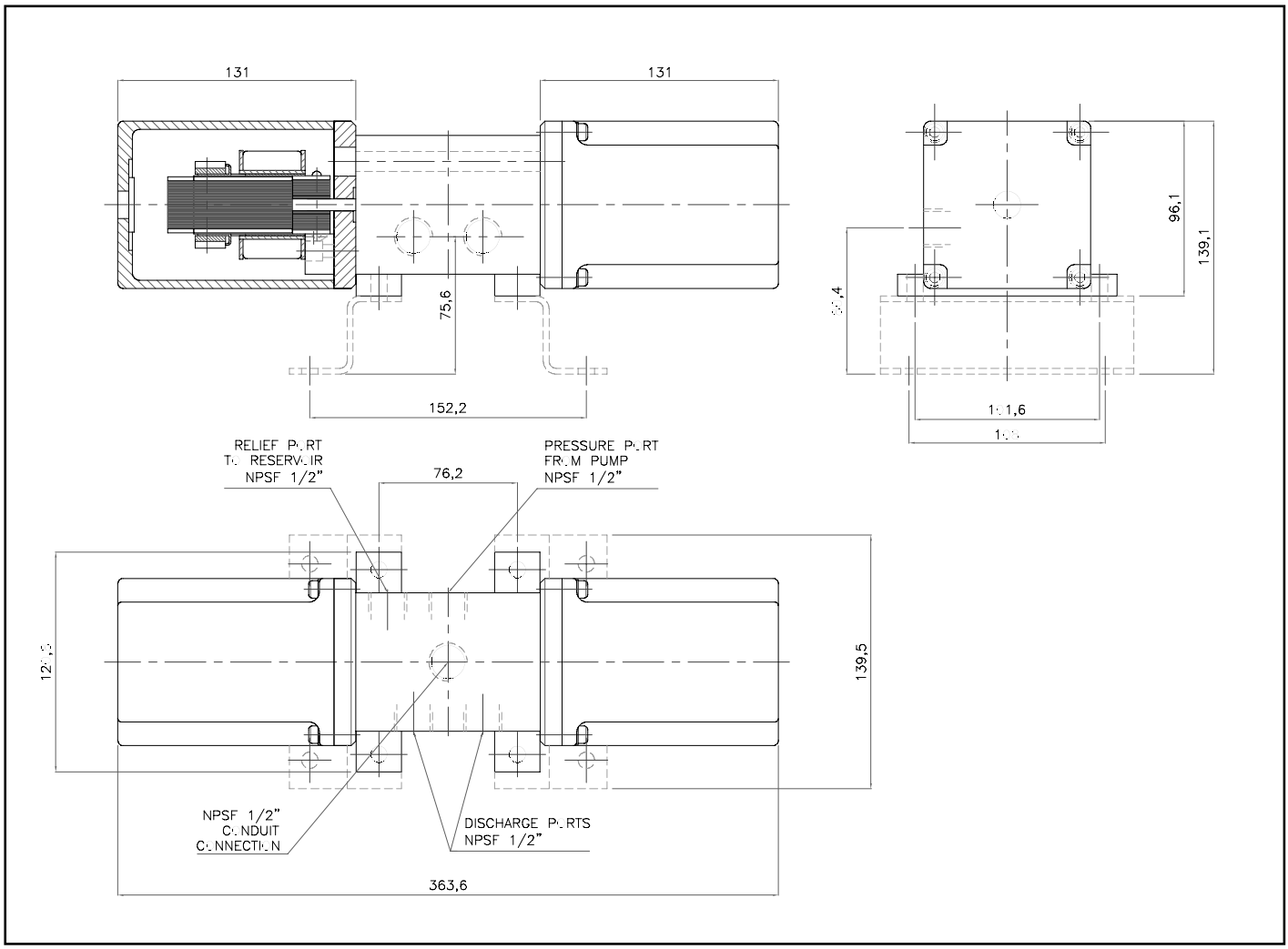

Order examples: VCI-R10-2-5-A

Reversing valve, model VCI-R10 to be used with grease, feed with 220V current and 50 Hz frequency.

Requirement code

VCI-R10 [ ] [ ] [ ]

Current	
110 V	1
220 V	2
380 V	3
440 V	4

Frequency	
50 Hz	5
60 Hz	6

Lubricant	
Grease	A
Oil	B

Reversing Control Valve Mod. VCI-R20

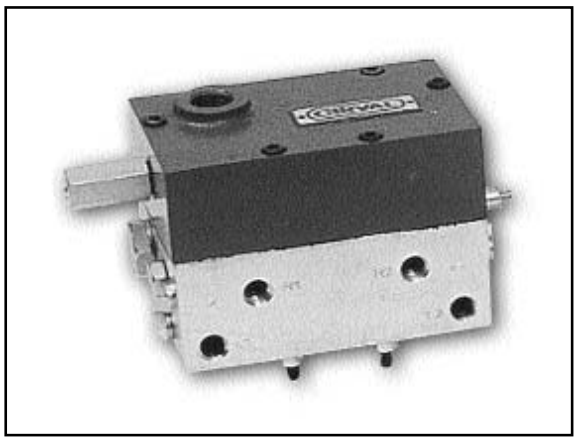

Description

The model VCI-R20 reversing valve directs the flow of lubricant alternately to the two grease supply lines of a dualine lubrication system. After the pressure in the active supply line has reached a value high enough to ensure the satisfatory operation of all the dualine valves in the system. The reversing valve operates to put this supply line in relief to the reservoir and permits the other supply lines to receive lubricant delivery from the pump.The control of pressure is accomplished through the use of a spring , one end of which is anchored to an adjustable screw and the other end to a fulcrum arm which is connected to a gear segments. This gear segments in turn moves the control piston.To increase the operating pressure of system , the adjusting screw should be turned out and to lower the pressure turn it in. The adjusting screw bonnet serves not only to prevent leakage around the screw thread but also to lock the screw in place. The VCI-R20 reversing valve can be used with electric motor driven , pneumatic or hydraulic operated pumps.

Specificacions

Lubricant	Oil or grease up to NGLI 2 grade
Work pressure	Mín.: 21 bar - Máx.: 49 bar
Temperature	Mín.: 0 ºC - Máx.: 80 ºC
Materials	Body and pistons: steel Seals acrilo nitrilo. Optional: vitón

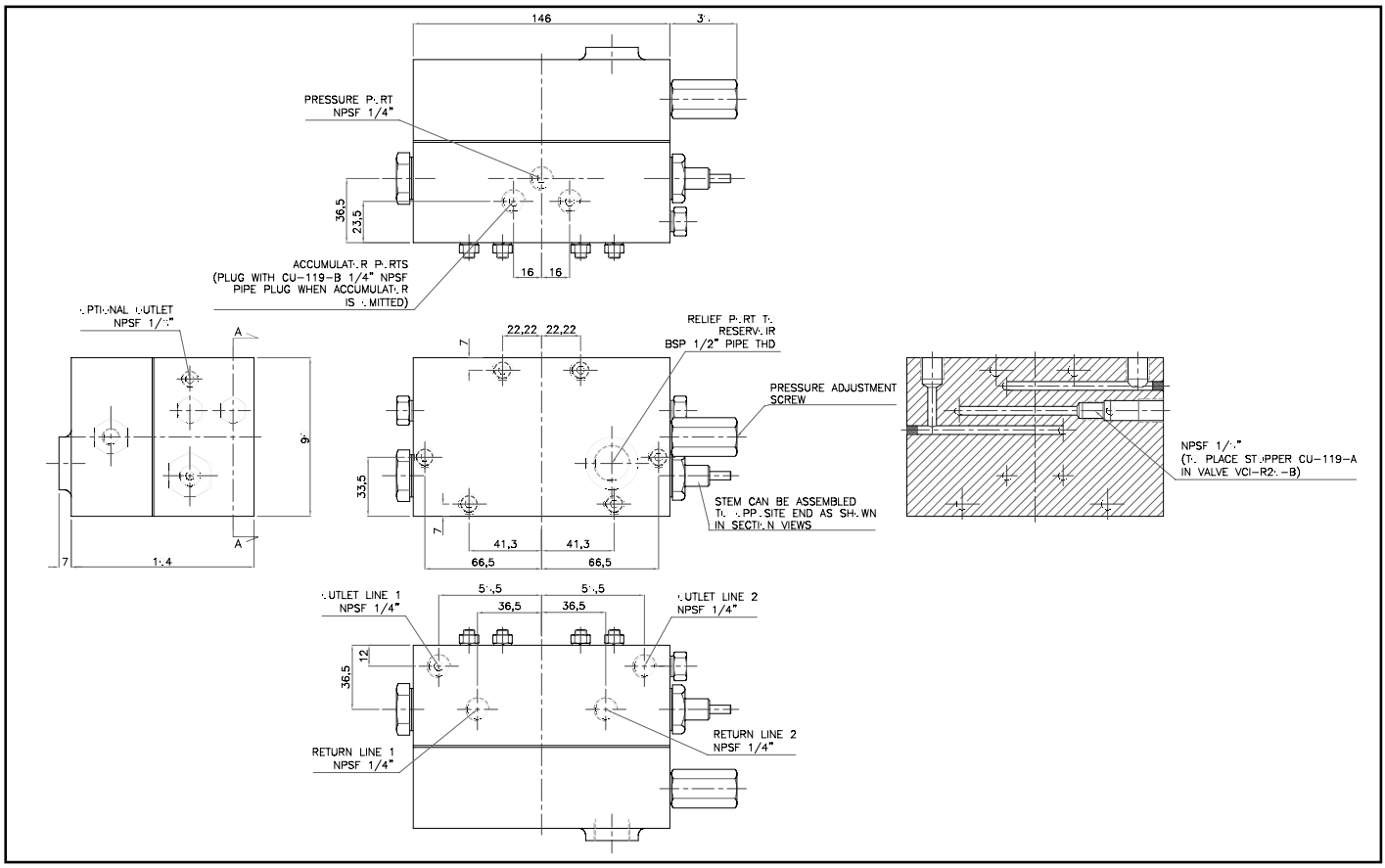

Order examples: VCI-R20-A

Reversing valve VCI-R20 to be used with grease.

Requirement code

VCI-R20	
Lubricant	
Grease	A
Oil	B

High Pressure Control Valve Model VCAP-3

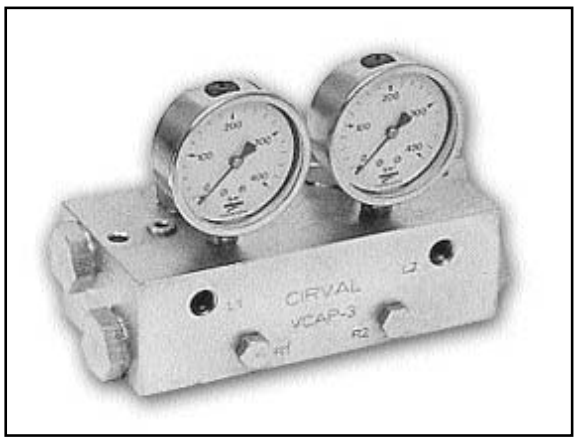

Description

The function of the VCAP-3 high pressure control valve , which is located directly after the VCI-R20 reversing valve is to augment the spring in the VCIR20 reversing valve thus permitting higher operating pressures in a loop type system. The utilisation of this principle in the VCAP-3 abviates the need for loop pipe to return to the VCI-R20 and in this instance the loop will be short circuited.
The system now becomes known as a short loop system. On the VCAP-3 high pressure control valve each of the supply lines are fitted with an adjustable spring loaded piston type check valve. Lubricant discharged from the pump to each of the supply lines in turn must pass through these check valves before returning to the respective return ports of the VCI-R20 reversing valve. Therefore the high pressure control valve supplement resistance of the control spring in the reversing valve , thus ensuring that an adjustable pressure in the range 35-210 bar can be developed.

Specifications

Lubricant	Oil or greaseup to NLGI 2 grade
Adjustment pressure	Mín.: 21 bar - Máx.: 250 bar
Temperature	Mín.: 0 ºC - Máx.: 80 ºC

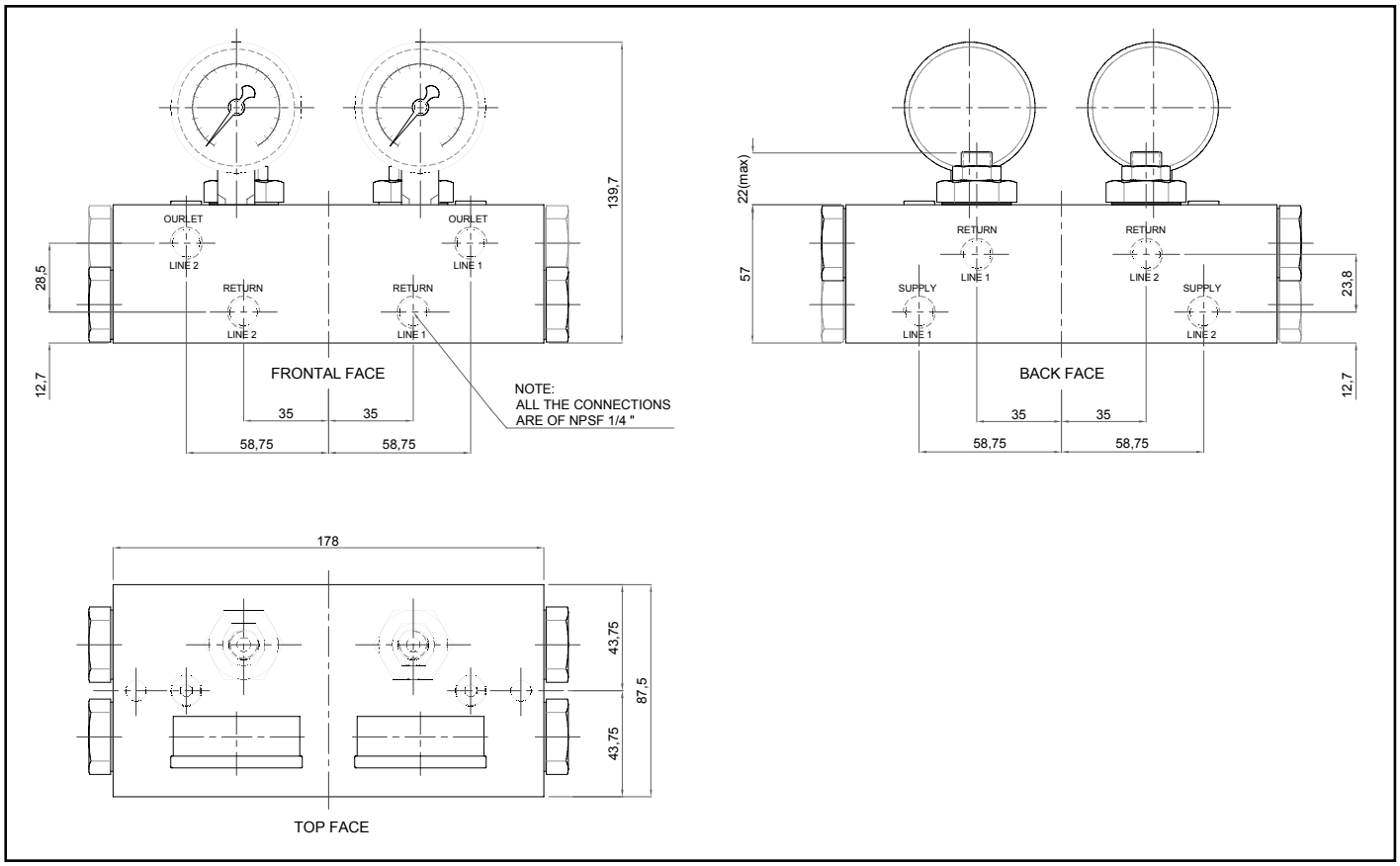

Example Order: VCAP-3-1

Hight pressure control valve mod. VCAP-3 with return, without manometers.

Requirement code

VCAP-3			
With return	1	Manómeters	
Without return	2	With manom.	3
		Without man.	-

Relief Valve/Strainer
Model VCA-F

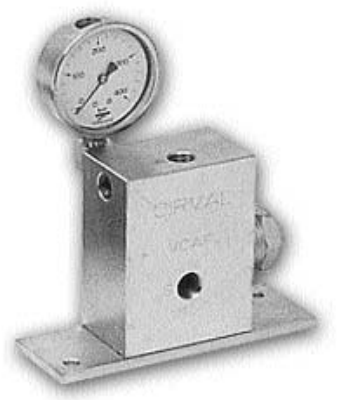

Description

The VCA-F relief valve/strainer combination can be used with large electric motor driven, pneumatic or hydraulic operated grease pump stations. The relief valve protects the lubrication system components from excess pressure. In the event of the system developing pressure in excess of the pressure settings on the relief valve , a pressure relief line opens and lubricant is allowed to flow back to the lubricant reservoir.

Specifications

Range of relief valve	168-175 bar
Lubricant	Oil or grease up to NLGI 2 grade
Max. pressure	250 bar

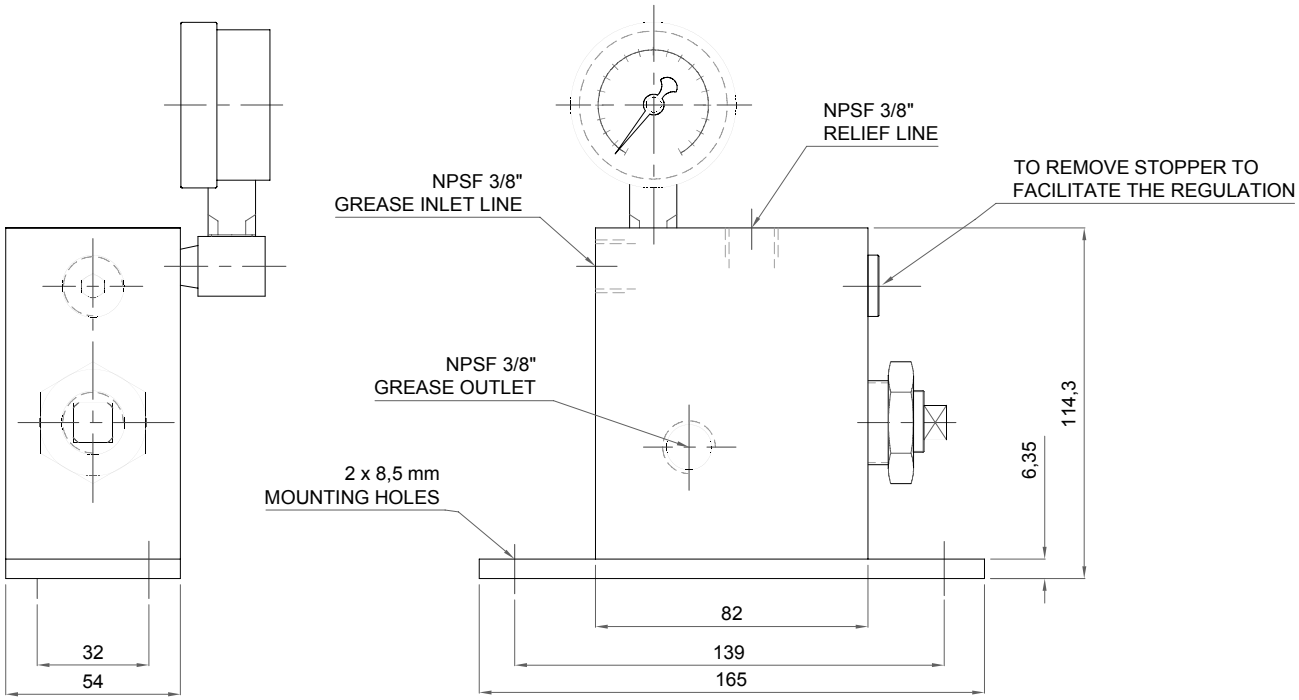

Order examples: VCA-F

Control valve mod. VCAF; without manometer.

Requirement code

VCA-F	
Manometer	
with man.	1
without man.	-

Shut Off Valve
Model VCC

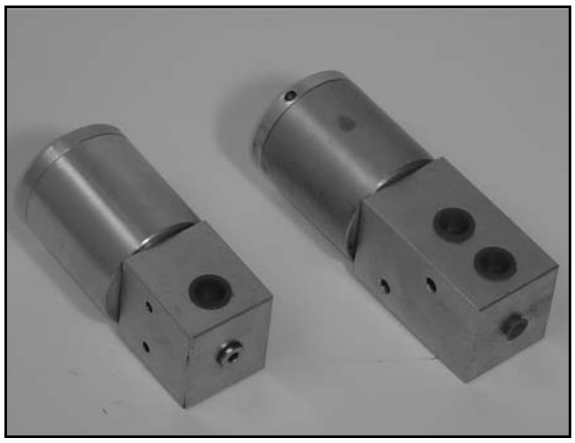

Description

The model VCC shut off valve is a piston type lubricant isolating valve. An air operated cylinder is attached to the lubricant isolating piston. By applying air on the upper side of the air operated cylinder the lubricant isolating piston closes the lubricant port and air being applied on the lower side of the air operated cylinder allows the lubricant isolating piston to open the lubricant port. The model VCC shut off valve is used to isolate lubricant supply lines thus allowing independent operation of certain zones in any lubrication system.
The model VCC shut off valve is available in both a single line and a dualine version.

Specifications

Max. work pressure	8 bar (pneumatic)
Min. work pressure	3 bar (pneumatic)
Compressed air thread	ø1/4” NPTF
Conexion thread	1/4” - 3/8” - 1/2” (NPSF)
Work pressure	Máx.: 250 bar (Hidraulic)
Lubricant	Oil or grease up to NLGI 2 grade

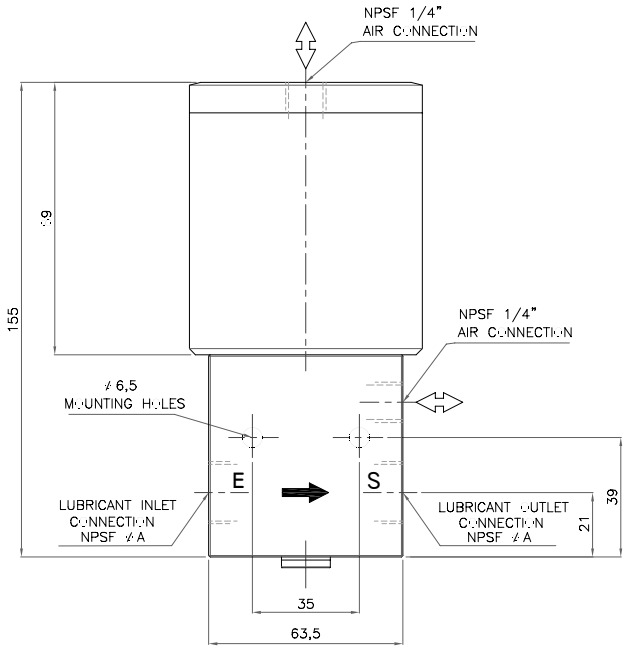

MODEL VCC-21
SINGLE PATH

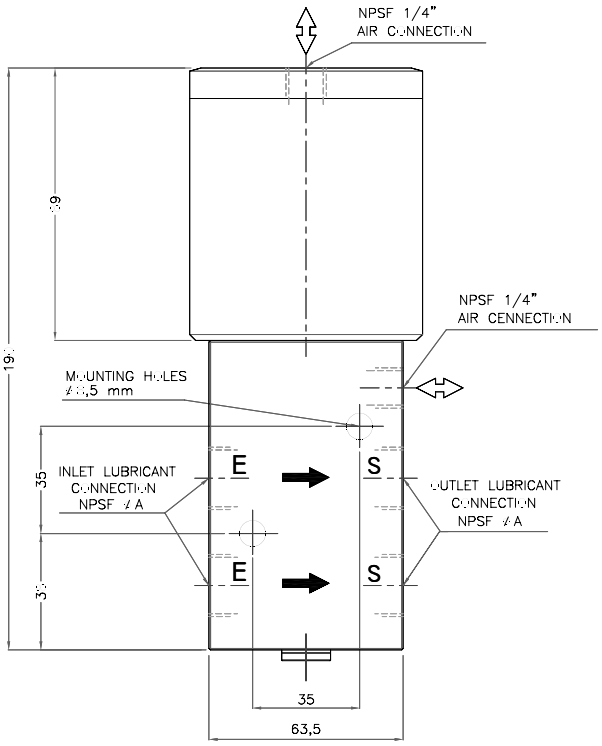

MODEL VCC-22
DOUBLE PATH

Requirement code

VCC ☐ ☐

Model	
Single path	21
Double path	22

øA	
1/4”	1
3/8”	2
1/2”	3

Flow Switch
Model CU-693-2

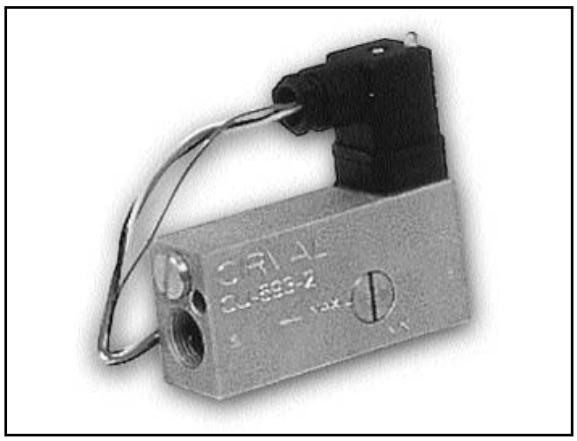

Description

The model CU-693-2 flow switch is used as an alarm or trip signal if flow of lubricant in a line decreases. A typical example is the monitoring of oil flow in an oil circulating system. By connecting the flow switch contact to the control circuit of the machine being served by the oil circulating system , one can either stop the machine or sound an alarm when the oil flowrate drops below the set point on the CU-693-2 flow switch.

Specifications

Pressure range	70 bar
Room temperature	-6ºC a 93ºC
Max. fall pressure	0,3 bar in flow regulator
Range work	1,13 a 53 litres./min.

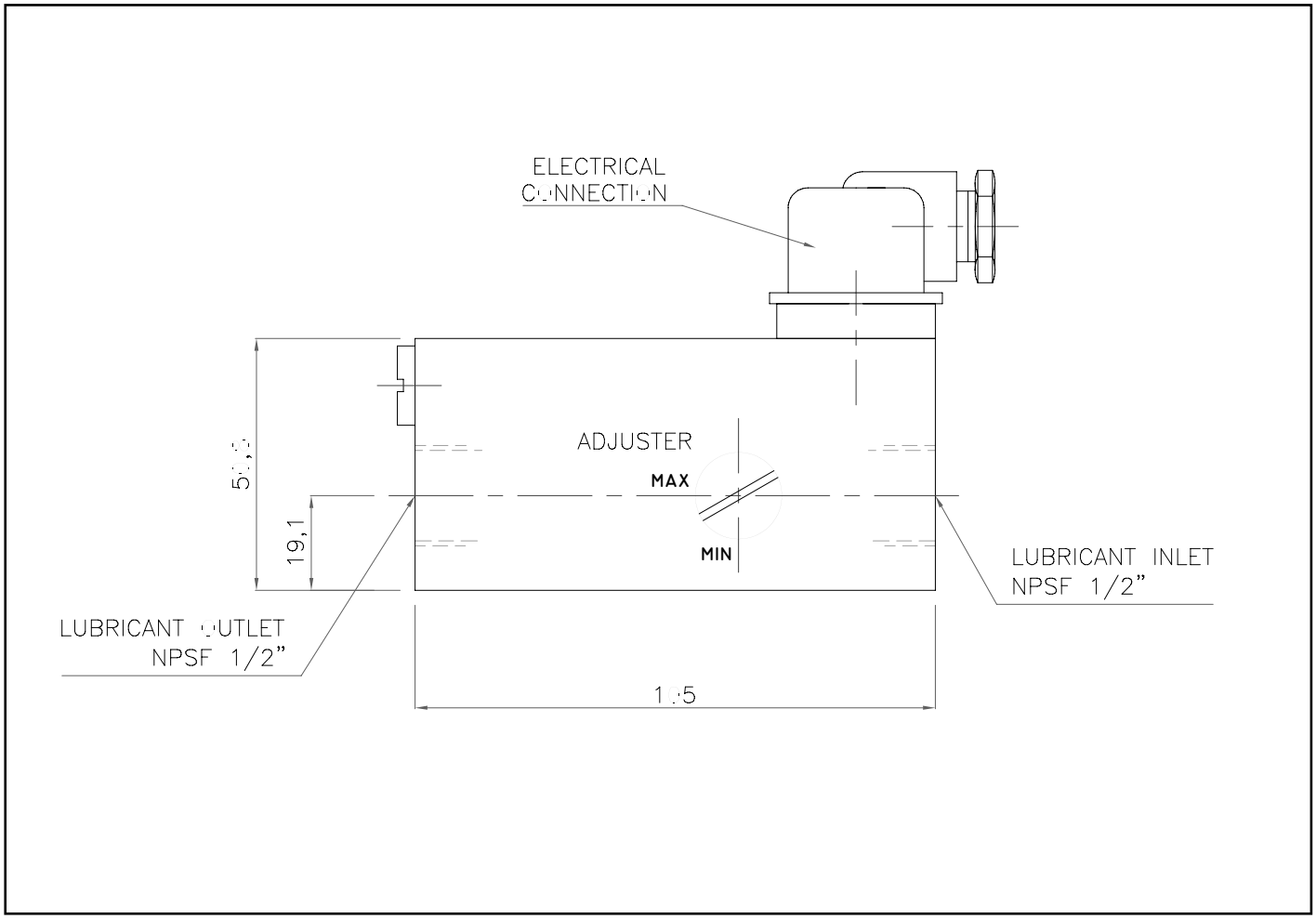

Requirement code

CU-693-2

Control Valve
Flow Regulator CU-986

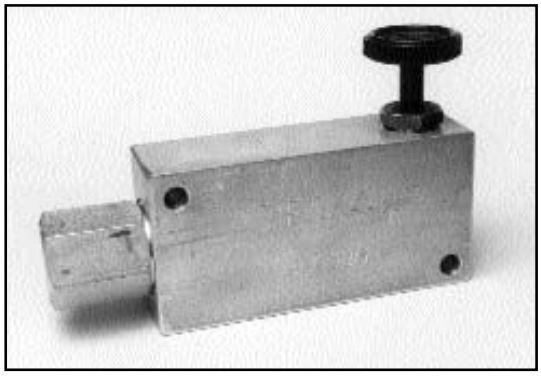

Description

The model CU-986 flow rcontol valve are generally used to regulate the flow of lubricant in oil circulating systems. They can also be used to dump excess oil back to tank.

Specifications

Max. Work pressure	70 BAR	
Room temperature	-6ºC a 93ºC	
Model	CU-986-A	CU-986-B
Max. Flow pressure	5,3 BAR a 3,8 Lts/min	5,3 BAR a 15,2 Lts/min
Work range	3,8 L/min / 4 Rotation*	3,8 L/min / 1 Rotation*

*Rotation regulation handle

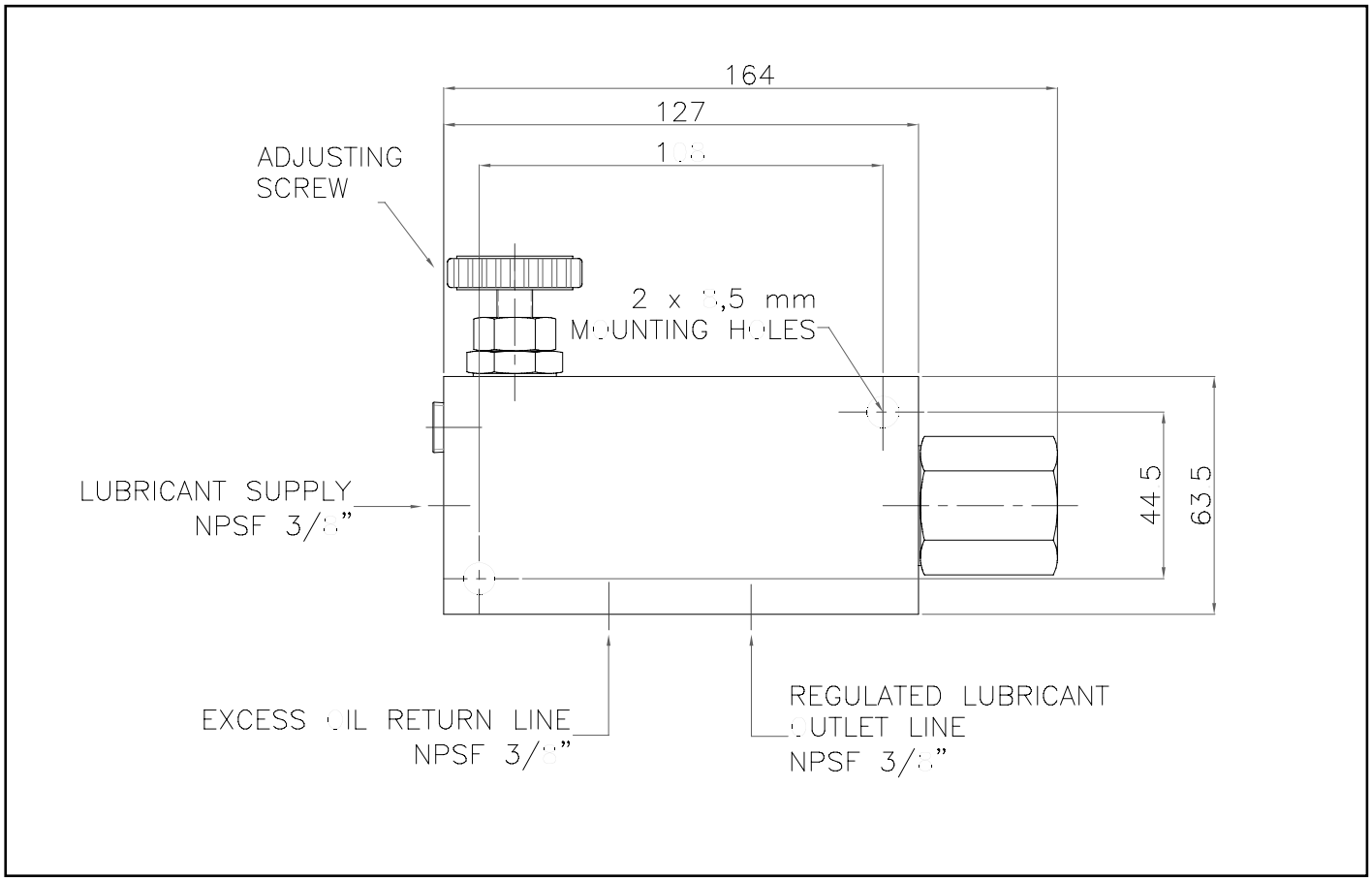

Requirement code

CU-986 [ ]

Regulator	
3,8 L/min / 4 Rotation*	A
3,8 L/min / 1 Rotation*	B

*Rotation regulation handle

Progressive Line

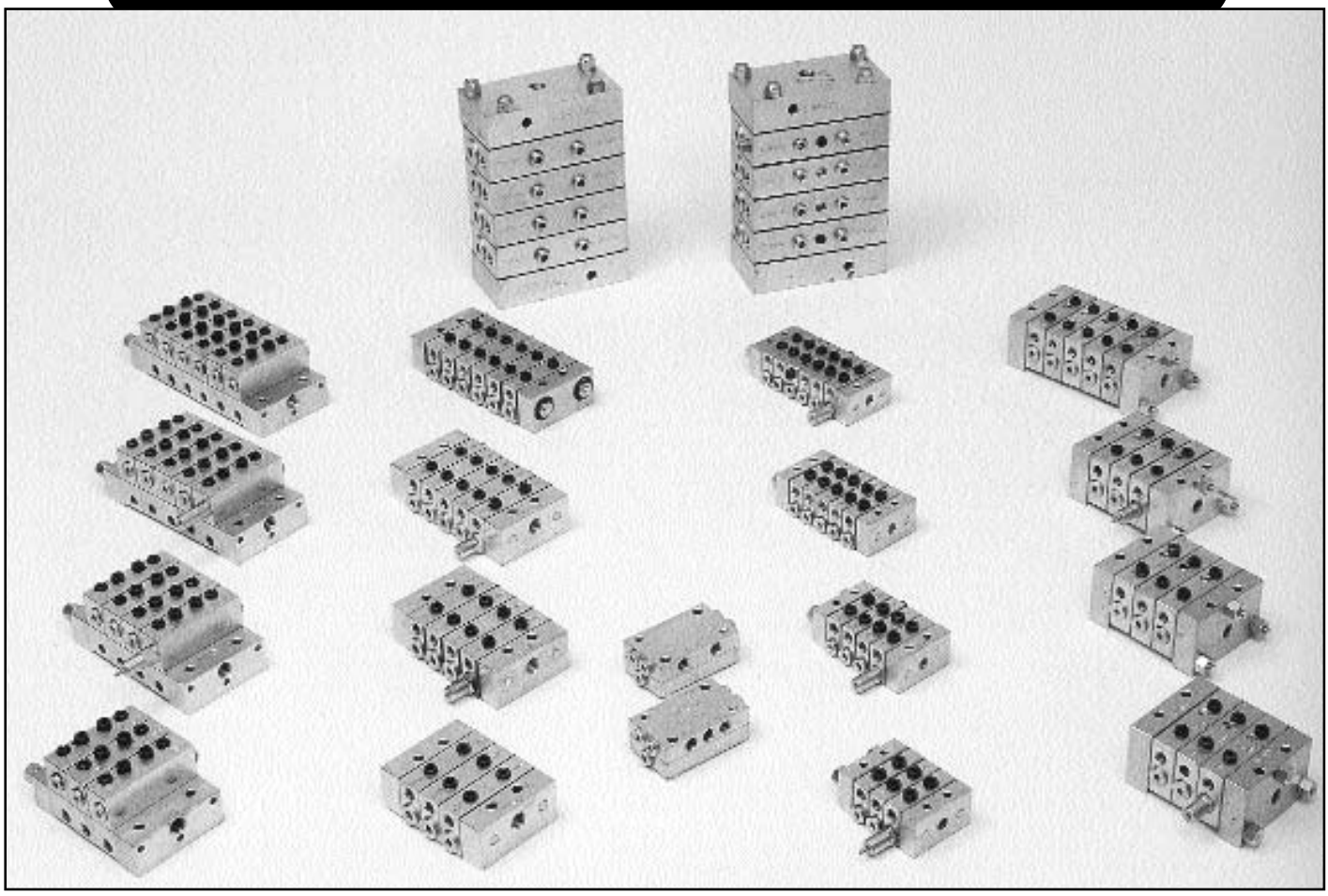

Valve Mod. MJ

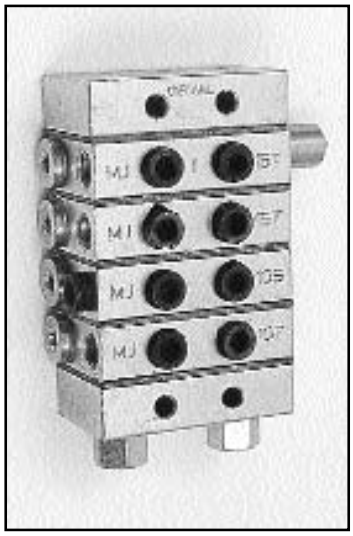

Description

MJ valves are designed for lubrication systems as fitted to machine tools and other similar equipment.
A typical MJ valve consists of an inlet section, an end section and from 3 to 10 sections. A set of valves can feed up to a maximun of 20 lubrication points.
Each sections of the valve can different discharge capacities.
Each section marked with "T" has two discharge outlets, one for each side of the section.
Each section marked with "S" has only one outlet, the other outlet is blocked thus doubling the discharge capacity to the open outlet.
These valves could be fitted with accessories such as cycle indicators, blocked line indicators and pressure switches. These are used to monitor and control the operation of the valve.
The close tolerance between the piston and the bore ensures an exact quantity of lubricant is discharged at high pressure.

Specifications

Materials	Steel (zinc)	Max. temp. operation	80 ºC
Max. pressure	110 bar	Max. frequency	150 cycle/min.
Lubricant	Oil or grease up to NLGI 2 grade		

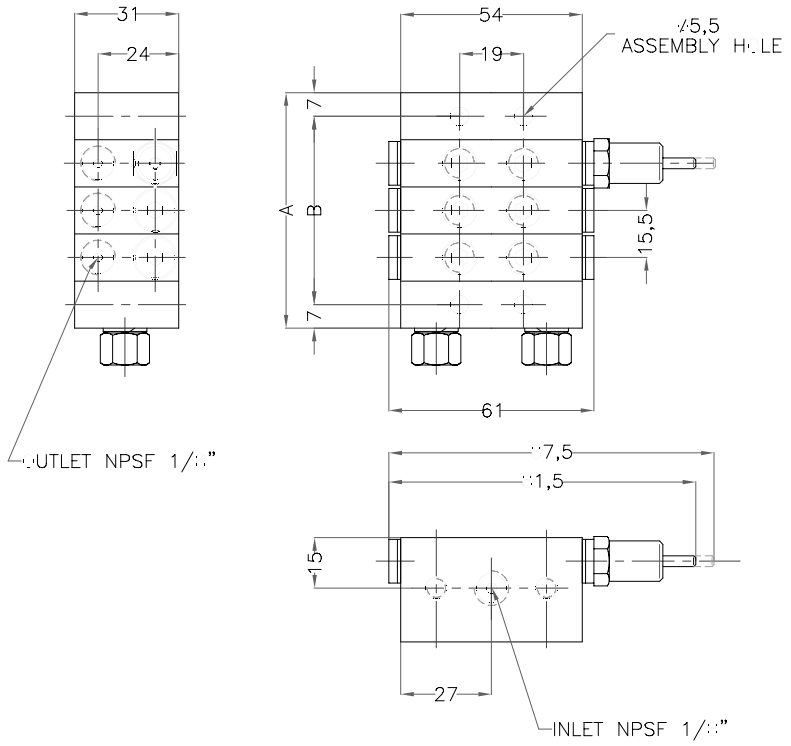

Mod.	A	B
MJ-3	76	62
MJ-4	91,5	77,5
MJ-5	107	93
MJ-6	122,5	108,5
MJ-7	138	124
MJ-8	153,5	139,5
MJ-9	169	155
MJ-10	184,5	170,5

Capacity descharge per module

Size	Pulg³/cycle	cm³/cycle
5	0,005	0,081
10	0,010	0,163
15	0,015	0,245

Requirement code

MJ [ ] - [ ] - ([ ] [ ] [ ])

Module Quantity
3
4
5
6
7
8

Cycles Indicator	
With Cycle Indicator	I
Without Cycle Indic.	-

Module Capacity
5
10
15

Type Discharge	
Single Discharge	S
Double Discharge	T

*Option Cross-Porting	
Right Cross Porting	CR
Left Cross Porting	CL
Both side Cross Porting	CB

* omit when not necessary

Composition per module

Order examples: MJ3 - I - (10 SCR - 10 T - 15 T)

Valve according to example

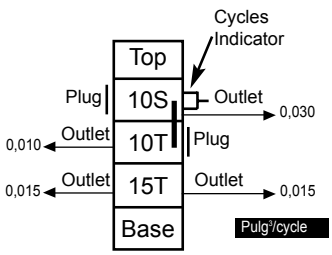

Note : The modules capacity 05, are not provided by indicator of cycles of functioning.

Valve
Mod. MR

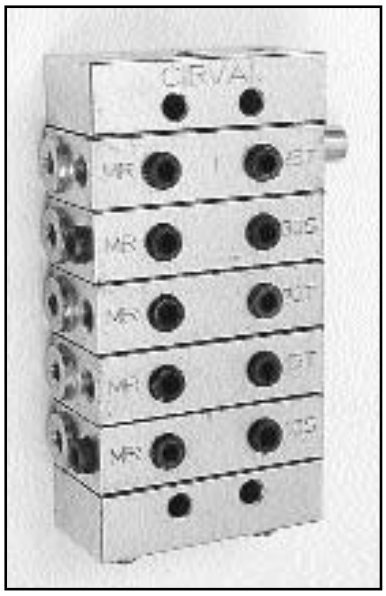

Description

The MR progressive single line valve are designed for lubrication system fitted to machine tools, machinery in iron and steel manufacturing, hydraulic presses, rocker arm and other similar machines.
In many assemblies these MR valves work as a primary valve for lubrication systems which contains MJ secondary valves.
A typical MR valve consists of an inlet section, an end section and from 3 to 10 intermediate sections.
A single valve can feed a maximun of 20 lubrication points.
The valve sections could consists of different discharge capacities. Each section with "T" has two outlets, one of each side of the section.
Each section or module indicated with "S" has only one outlet, doubling the discharge capacity to the mentioned outlet.
These valves can also be fitted with accessories such as cycle indicators, blocked line indicators and pressure switchese used to monitor and control the functionof the valve.
The close tolerance between the piston and the bore assures an exact quantity of lubricant is discharged even at high pressure.

Specifications

Materials	Steel (zinc)
Max. pressure	180 bar
Lubricant	Oil or grease up to NLGI 2 grade
Max. operation temper.	80 ºC
Max. frequency	150 cycles/min.

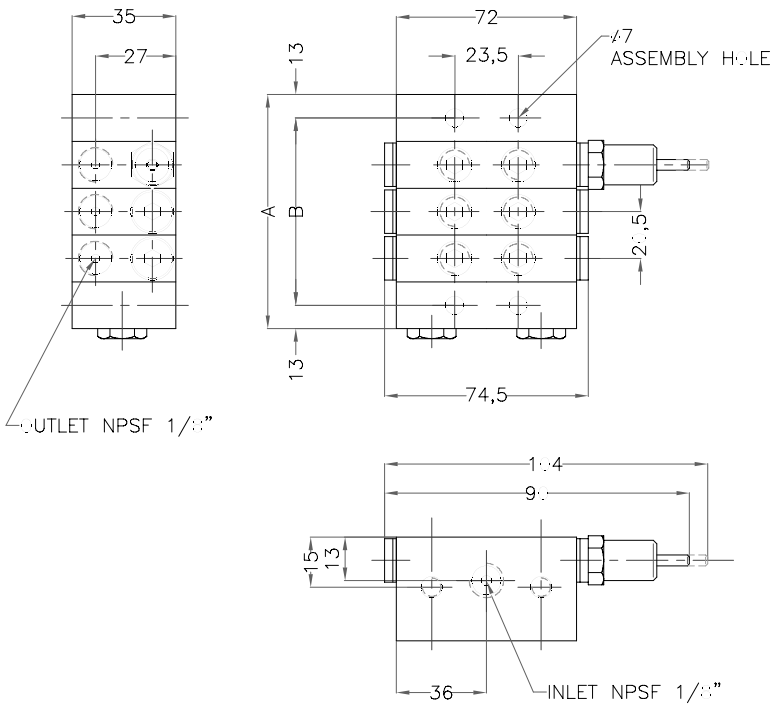

Mod.	A	B
MR-3	102	76
MR-4	122,5	96,5
MR-5	143	117
MR-6	163,5	137,5
MR-7	184	158
MR-8	204,5	178,5
MR-9	225	199
MR-10	245,5	219,5

Discharge Capacity per module

Size	Pulg³/cycle	cm³/cycle
5	0,005	0,081
10	0,010	0,163
15	0,015	0,245
20	0,020	0,327
25	0,025	0,409
30	0,030	0,491
35	0,035	0,573

Requirement code

MR [ ] - [ ] - ([ ] [ ])

Module Quantity: 3, 4, 5, 6, 7, 8

Cycles Indicator: With Cycle Indicator: I; Without Cycle Indic.: -

Module Capacity: 5, 10, 15, 20, 25, 30, 35

Type Discharge: Single Discharge: S; Double Disch.: T

***Option Cross-Porting**: Right Cross Porting: CR; Left Cross Porting: CL; Both side Cross Porting: CB

* omit when not necessary .

Composition per module

Example order: MR 5 - I - (25 S CL - 30 T - 35 SCR - 15 T - 20 SCL)

Note : The modules capacity 05 and 10, are not provided by indicator of cycles of functioning.

Valve according to example

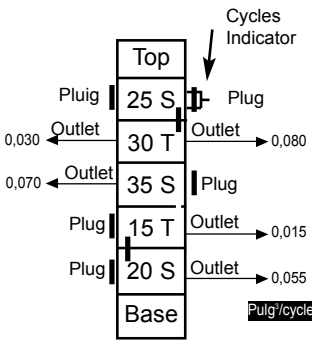

Valve
Mod. MX

Description

The MX progressive single line valve, is operated by lubricant being delivered from a pumping unit. They deliver either grease or oil in exact measured quantities.
Each segment of these valves can feed two points. A segment feeding two points is marked with a "T". By a method called cross porting, a segment could be changed feed only one point to lubricate, therefore delivering double the amount of the lubricant at this point. These segments are marked with a "S". Segments can be fitted with different size pistons therefore allowing more or less lubricant to be delivered to cover the different requirement
of equipment to be lubricated.
The valves are assembled with a minimun of 3 segments and a maximun of 10 segments. The quantity of lubricant being delivered depends on the diameter of the piston.

Specifications

Materials	Steel (zinc)
Max. pressure	250 bar
Lubricant	Oil or grease up to NLGI 2 grade
Max. operation temper.	80 ºC
Max. frequency	150 cycle/min.

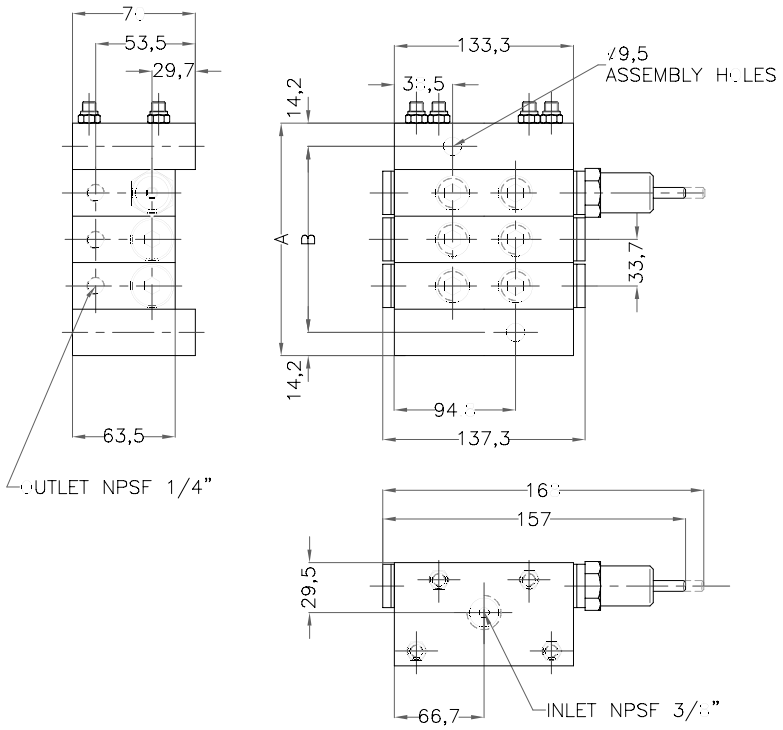

Mod.	A	B
MX-3	166,5	138,1
MX-4	200,2	171,8
MX-5	233,9	205,5
MX-6	267,6	239,2
MX-7	301,3	272,9
MX-8	335	306,6
MX-9	368,7	340,3
MX-10	402,4	374

Capacity discharge per module

Size	Pulg³/cycle	cm³/cycle
25	0,025	0,40
50	0,050	0,81
75	0,075	1,22
100	0,100	1,63
125	0,125	2,04
150	0,150	2,45

Requirement code

MX [ ] - [ ] - ([ ] [ ])

Module Quantity: 3, 4, 5, 6, 7, 8, 9, 10

Cycles Indicator

With Cycle Indicator	I
Without Cycle Indic.	-

Module Capacity: 25, 50, 75, 100, 125, 150

Type Descharge

Single Discharge	S
Double Disch.	T

***Option Cross-Porting**

Right Cross Porting	CR
Left Cross Porting	CL
Both side Cross Porting	CB

* To omit when not necessary

Composition per module

Example Order: MX - 5 - I - (25 SCL - 50 T - 125 SCR - 75 T - 100 T)

Valve according to example

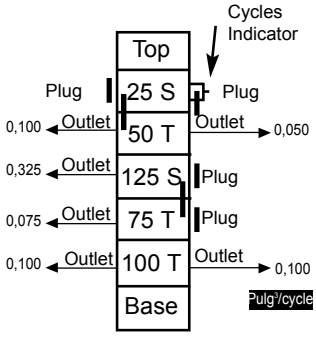

Valve
Mod. C-2000

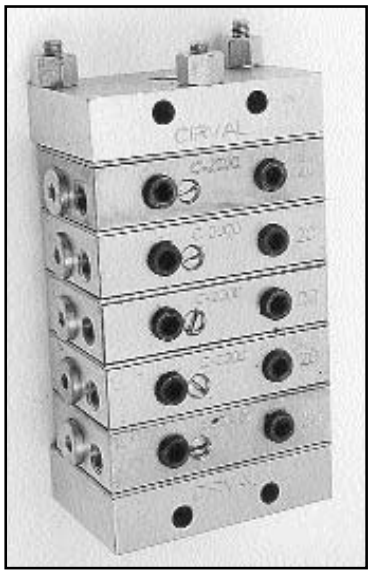

Description

C-2000 valves are the main components of a progressive single line system. The assembled valves with 3 to 10 metering sections, distribute and provide grease or oil from the pump to the different lubrication points .
The lubricant discharge capacity of each section is determined by the size of the piston.
Each section can feed two different points or by means of a simple modification on top of eachsection changing a small conical plug for a flat one, the two outlets are combined doubling the lubricant to one of the outlets.
The second outlet can now be plugged.
These valves can be fitted with accessories such as a cycle indicator, blocked line indicators and pressure switches which ca be used to monitor and control function of the valve.
The close tolerance betwen the piston and the bore ensures an exact quantity of lubricant is discharged at high pressure.

Specifications

Materials	Steel (zinc)
Max. pressure	250 bar
Lubricant	Oil or grease up to NLGI 2 grade
Max. operation temper.	80ºC
Max. frequency	150 cycle/min.

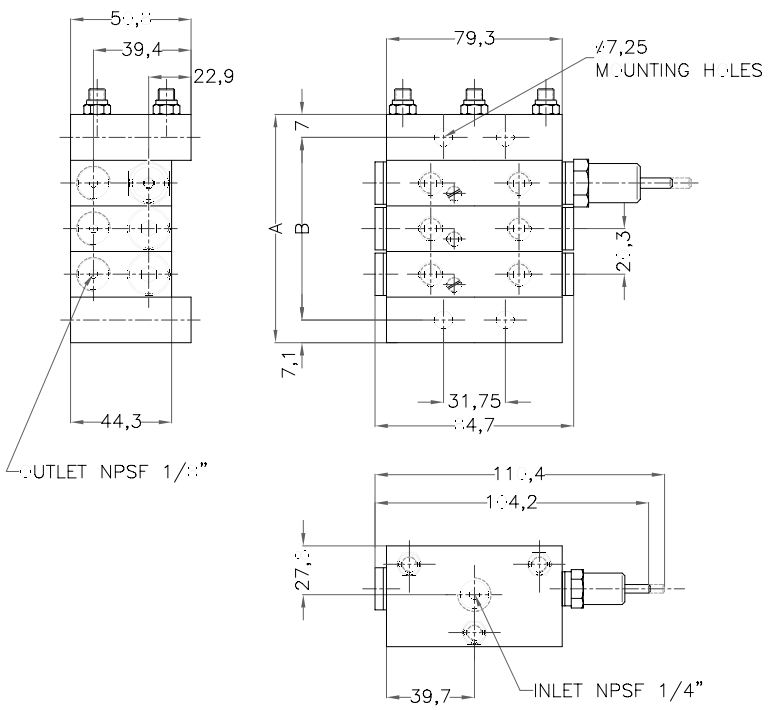

Model	A	B
C-2000-3	100,2	86,1
C-2000-4	120,5	106,4
C-2000-5	140,8	126,7
C-2000-6	161,1	147
C-2000-7	181,4	167,3
C-2000-8	201,7	187,6
C-2000-9	222	207,9
C-2000-10	242,3	228,2

Capacity discharge per module

Size	Pulg³/cycle	cm³/cycle
5	0,005	0,081
10	0,010	0,163
15	0,015	0,245
20	0,020	0,327
25	0,025	0,409
30	0,030	0,491
35	0,035	0,573

Requirement code

C-2000 [ ] - [ ] - ([ ] [ ] [ ])

Module Quantity
3
4
5
6
7
8
9
10

Cycles Indicator	
With Cycle Indicator	I
Without Cycle Indic.	-

Module Capacity
5
10
15
20
25
30
35

Type Discharge	
Single Discharge	S
Double Disch.	T

*Option Cross-Porting	
Right Cross Porting	CR
Left Cross Porting	CL
Both side Cross Porting	CB

* Omit when not necessary

Composition per module

Example Order: C2000 - I - (20T - 35 TCR - 30TCB - 20T)

Valve according to example

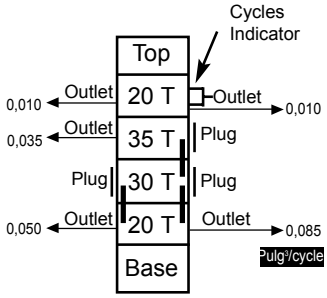

Note : The modules capacity 05 and 10, are not provided by indicator of cycles of functioning.

Progressive Divider Valve Mod. MU

Description

MU valves are the main components of Cirval progressive single line system. Its modular design makes the system easy to assembly, easy to modify and maintain without the need of removing the feeding line to the valve set and the points being lubricated.
These valve consist of 3 or more valve modules assembled on a segmented base. The valve modules can have 1 or 2 outlets doubling the lubricant discharge when the outlets are combined
The close tolerance between piston and bore allow the modules to deliver an exact quantity of lubricant at high pressure.

These modular valves are designed to operate with either grease or oil in manual systems or automatic systems and are used on all kinds of industrial machinery.
These valves can also be fitted with accessories such as cycle indicators, blocked line indicators and pressure switches. These accessories are used to monitor and control the operation of the valves.

Specifications

Materials	Steel (zinc) - (nickel quimic or stainless for special order). Seal: Acrilo nitrilo - Option: vitón.
Max. pressure	250 bar
Lubricant	Oil or grease to NLGI 2 grade
Max. operating temper.	80ºC
Max. frequency	150 cycle/min.

Model	"L"	"M"
MU-3	115.4	90.9
MU-4	138.9	114.3
MU-5	162.3	137.7
MU-6	185.7	161.1
MU-7	209.1	184.5
MU-8	232.6	207.1
MU-9	256.1	230.6
MU10	279.6	254.1

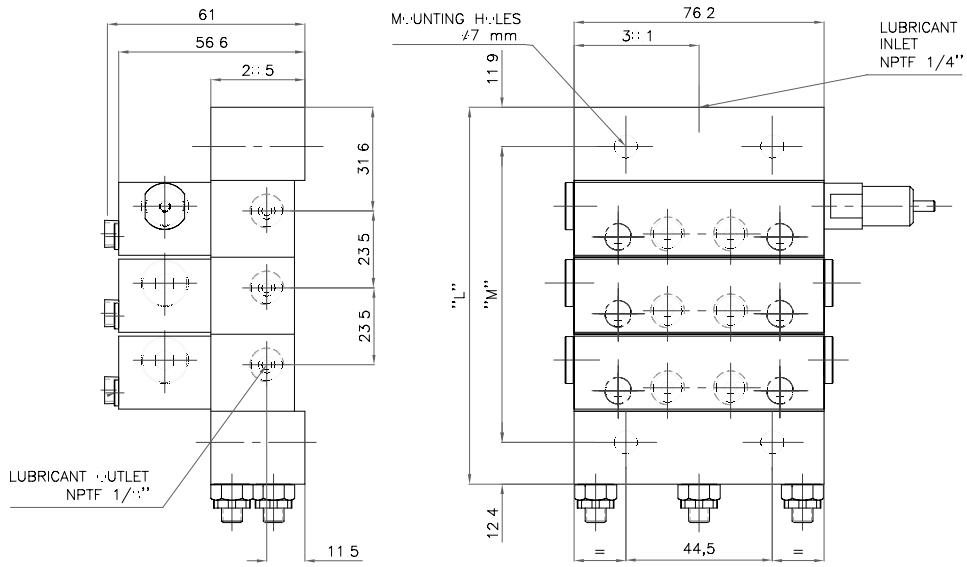

Discharge capacity per outlet

Size	Pulg³/cycle	cm³/cycle
5	0,005	0,081
10	0,010	0,163
15	0,015	0,245
20	0,020	0,327
25	0,025	0,409
30	0,030	0,491
35	0,035	0,573
40	0,040	0,655

Part Numbers

MU [ ] - [ ] - ([ ] [ ])

Module Quantity	
3	
4	
5	
6	
7	
8	
9	
10	

Cycles Indicator	
With Cycle Indicator	I
Without Cycle Indic.	-

Module Capacity	
5	
10	
15	
20	
25	
30	
35	
40	

Type Discharge	
Single Discharge	S
Double Discharge	T

*Option Cross-Porting	
Right Cross Porting	CR
Left Cross Porting	CL
Both side Cross Porting	CB

* Omit when not necessary

Composition per module

Example : MU - 5 - I (15T -10 SCR - 15 T - 20SCL - 35 T)

Valve according to example

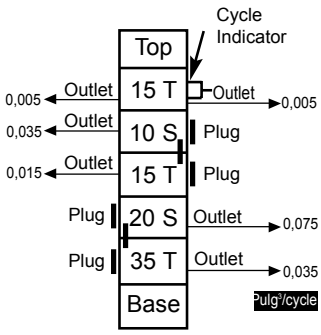

Note : The modules capacity 05 and 10, are not provided by indicator of cycles of functioning.

Valve
Mod. MD

Description

MD valves are designed to be used in progressive single line centralized lubrication systems with either grease or oil. These valves consist of 2 steel pieces with ‘o’ rings. They can feed 2,3 4 or 6 lubricant points. Valves with 2,3 and 4 points require 1.31 cm3 of lubricant to complete an entire cycle. An MD-2 valve will divide this volume in 2 outlets of 0.655 cm3. An MD-4 will divide the volume in 4 outlets of 0.327 cm3. An MD-6 requieres 0.983 cm3 of lubricant to complete an entire cycle, and will divide this volume in 6 equal outlets of 0.16 cm3.
Features: Delivery of meassured quantities of lubricant. Economic and compact design. Easy to assembly on new or old machines.

Especificaciones

Materials	Steel (zinc)
Max. work pressure	250 bar
Lubricant	Oil or grease up to NLGI 2 grade
Available with Cycle Indicator	

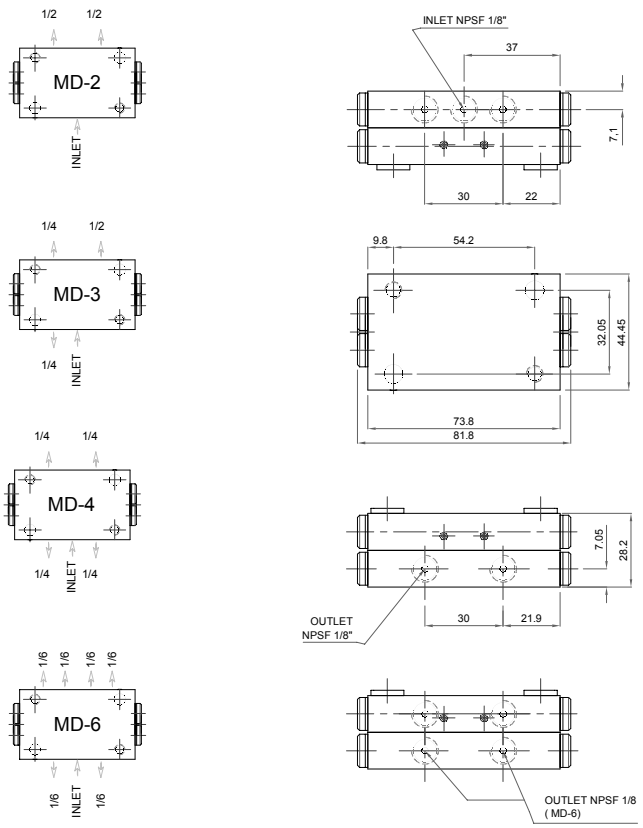

Discharge Volume *	
MD-2, MD-3 y MD-4	1,31 cm³
MD-6	0,98 cm³

*Lubricant needed to make a complete cycle of the dividing valve.

Discharge Volume	
MD-2	2-0,655 cm³
MD-3	2-0,655 cm³ + 1-0,655 cm³
MD-4	4-0,327 cm³
MD-6	6-0,160 cm³

Order examples: MD-3
Valve mod. MD with 3 outlet.

Requirement code

MD	
2 OUTLETS	2
3 OUTLETS	3
4 OUTLETS	4
6 OUTLETS	6

Valve
Mod. MG

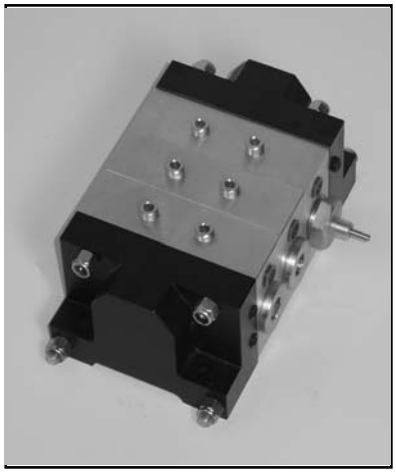

Description

The MG progressive grease valve operates hydraulically and can deliver grease or oil in exact measured quantities.
The section of these valves can feed two points. Sections indicated with "T" has two outlets, or through a method called cross porting, a section would be able to feed one lubrication point, doubling the quantity of lubricant being discharged.These modules are indicated with "S".
Different size sections allows different quantities to be discharged.
The valves are assemblied with a minimun of 3 sections and a maximun of 10 sections.
The delivery volume of a section depends on the diametre of the piston.
Accessories such as cycle indicators, blocked line indicators and pressure switches can be fitted.
These are used to monitor and control the operation of the valve.

Specifications

Materials	Steel (zinc)
Max. pressure	250 bar
Lubricant	Oil or grease up to NLGI 2 grade
Max. operation temper.	80 ºC
Max. frequency	150 cycle/min.

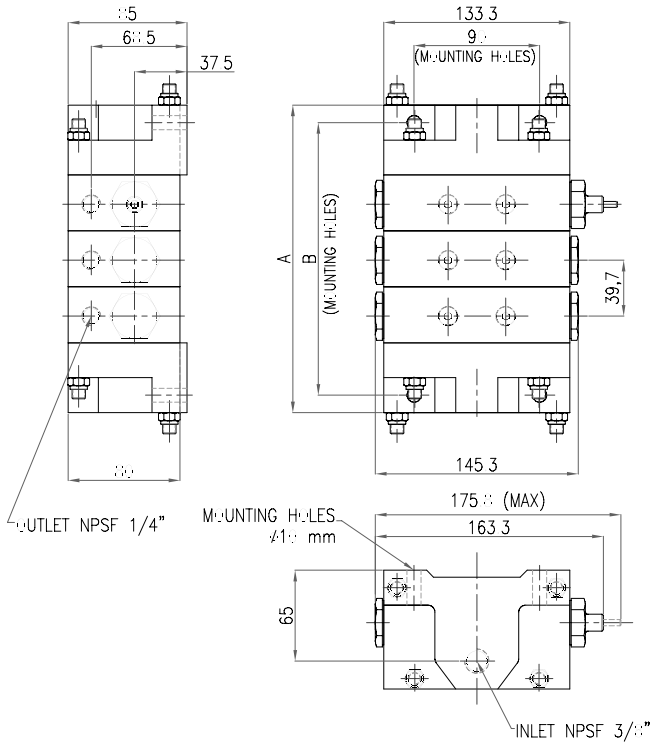

Mod.	A	B
MG-3	220	195
MG-4	260	235
MG-5	300	275
MG-6	340	315
MG-7	380	355
MG-8	420	395
MG-9	460	435
MG-10	500	475

Discharge capacity per module

Size	Pulg³/cycle	cm³/cycle
150	0,150	2,45
360	0,360	6,00

Requirement code

MG [ ] - [ ] - ([ ] [ ] [ ])

Module Quantity
3
4
5
6
7
8
9
10

Cycles Indicator	
With Cycle Indicator	I
Without Cycle Indic.	-

Module Capacity
150
360

Type Discharge	
Single Discharge	S
Double Disch.	T

*Option Cross-Porting	
Right Cross Porting	CR
Left Cross Porting	CL
Both side Cross Porting	CB

* omit when not necessary

Composition per module

Order examples: MG - 5 - I - (360 SCL - 150 T - 150 SCR - 360 T - 360 T)

Valve according to example

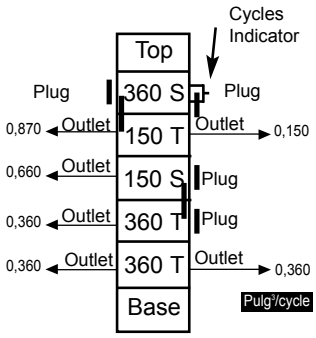

Unique Line

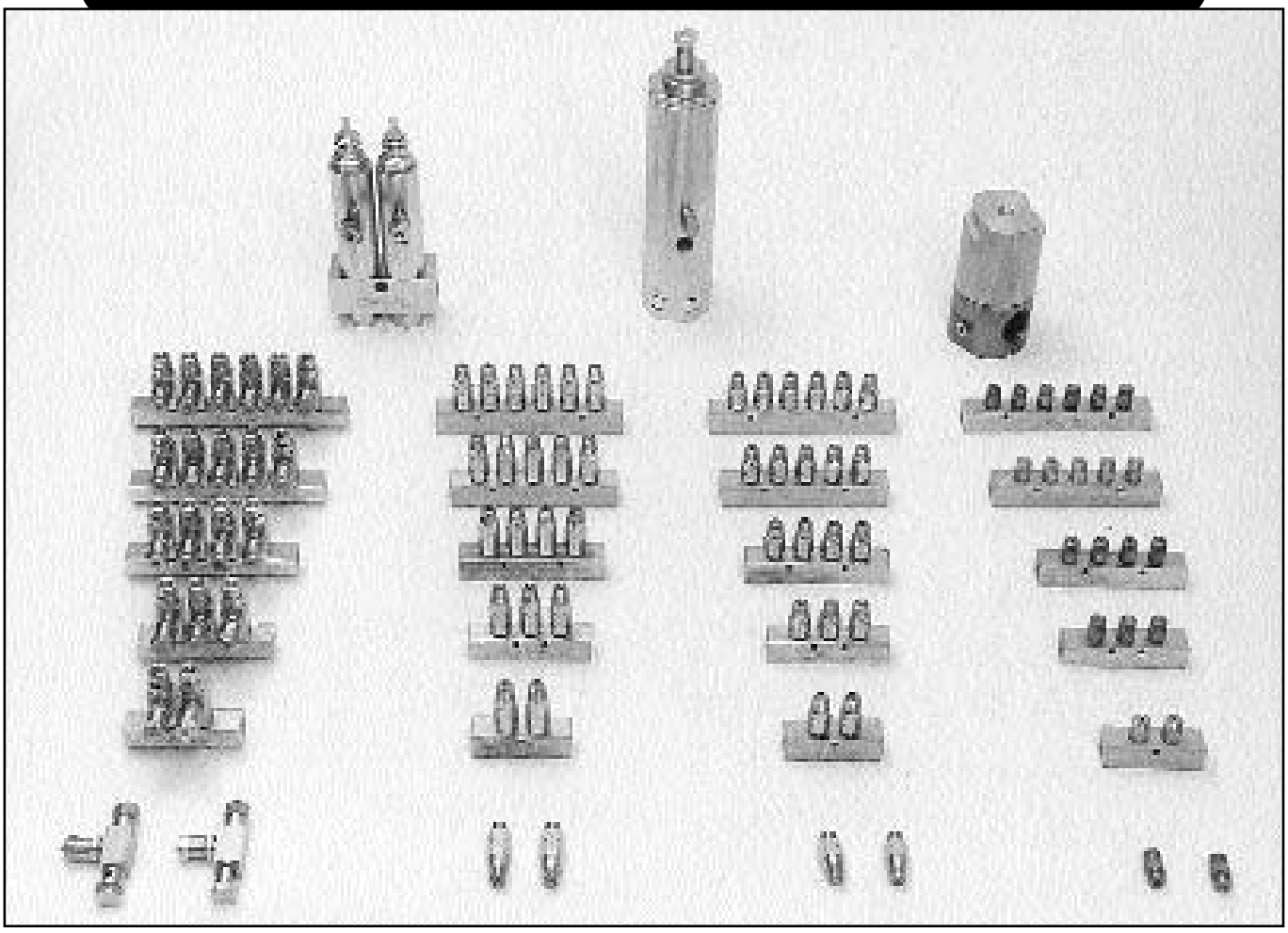

Resistence Dosage (Restrictor) Serie CFT

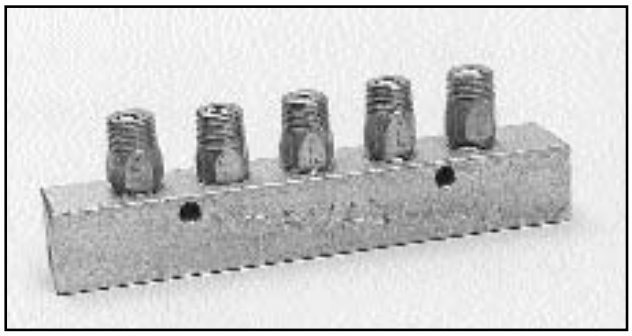

Description

CFT restrictors are lubricant flow units in a centralized oil lubrication systems. These are 3 different size of units allowing for the different lubrication requirementson a machine.

The units can be assembled by screwing them directly into the lubrication point or by assembling them onto manifolds that holds from 1 to 6 restrictors.

Functioning: The restrictors consist of a cylindrical chamber with an extremely precise diameter hole, where a needle keeps an exact oriface when assembled.

The differences in the surfaces in these oriface determines the oil flow. A filter and an internal non return valve completes the restrictor unit.

Specifications

Lubricant		Oils
Work pressure		4 bar (Máx.= 10 bar)
Temperature		Máx.: 80 ºC - Mín.: 0 ºC
Discharge for model	FT-0	2 Drops / min.
	FT-1	4 Drops / min.
	FT-3	16 Drops / min.

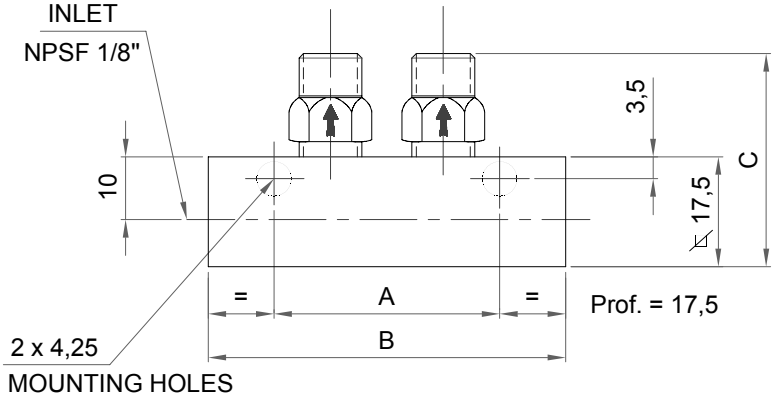

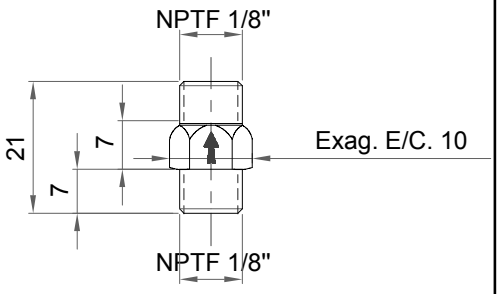

NOTE:
As the restrictor body has the same thread on both sides, any of the connectors in the table below can be used on any side.

Diameter Pipe	Connector
Diam. 3/16” (4,76 mm.)	CU-84-A + CU-81-AA1
Diam. 1/4” (6,35 mm.)	CU-84-B + CU-81-B1

CONNECTION BLOCK

Model	Nº Outlet	A	B	C
BCUL-02	2	36	57	34
BCUL-03	3	18	74	34
BCUL-04	3	36	92	34
BCUL-05	4	54	110	34
BCUL-06	5	72	128	34

Order examples: CFT-1-2

Dosimeter CFT-1
Connection Block BCUL-2

Requirement code

Dosimeter

CFT □

Flow	
2 drop/min.	0
4 drop/min.	1
16 drop/min.	3

Conexion Block

BCUL □

Block of 2 outlest Mod. BCUL-02	2
Block of 3 outlets Mod. BCUL-03	3
Block of 4 outlets Mod. BCUL-04	4
Block of 5 outlets Mod. BCUL-05	5
Block of 6 outlets Mod. BCUL-06	6

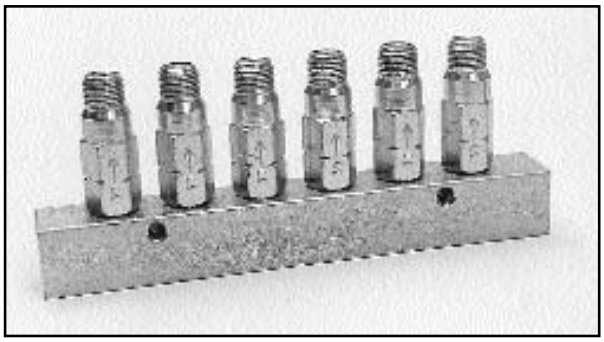

Description

The injector type metering unit is supplied with oil from the pump and charged with a measured quantity of lubricant.
The injector type metering unit is a one shot metering unit with a fixed delivery ate.
These injector type metering units are available in three different sizes.
The range is from 0.05 to 0.30 cm3.
They can be screwed directly into the lubrication point or they ca be assembled on to manifolds.

Line Diameter	Connectors
Diám. 3/16” (4,76 mm.)	CU-84-A + CU-81-AA1
Diám. 1/4” (6,35 mm.)	CU-84-B + CU-81-B1

Note: As the body has the same thread in both sides they can be fitted with the above connectors on both sides.

Specifications

Lubricant	Mineral Oil ISO 320 / 40º C
Pressure under work	22 - 28 bar
Máx. Operation Pressure	50 bar

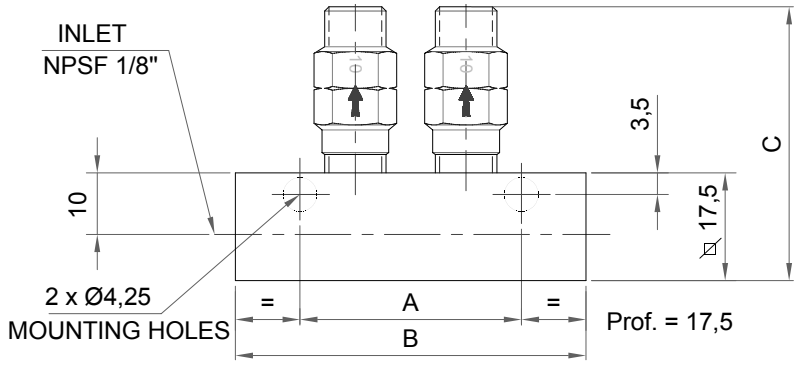

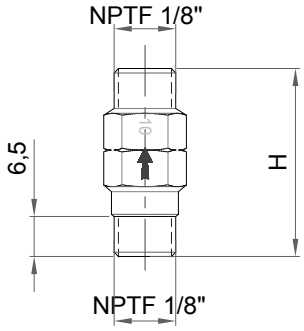

Manifold

Model	Nº outlets	A	B
BCUL-02	2	36	57
BCUL-03	3	18	74
BCUL-04	4	36	92
BCUL-05	5	54	110
BCUL-06	6	72	128

Injector type metering unit

Modelo	Discharge	C	H
CSKN 05	0,05 cm³	43	30,5
CSKN 10	0,10 cm³	43	30,5
CSKN 30	0,30 cm³	52	39,5

Example Order : CSKN-5-4

Dosimeter CSKN-5
Block conexión BCUL-4

Requirement Code

Dosimeter

CSKN ☐

Flow	
0,05 cm³	5
0,10 cm³	10
0,30 cm³	30

Block de conexión

BCUL ☐

2 outlets block Mod. BCUL-02	2
3 outlets block Mod. BCUL-03	3
4 outlets block Mod. BCUL-04	4
5 outlets blcok Mod. BCUL-05	5
6 outlets block Mod. BCUL-06	6

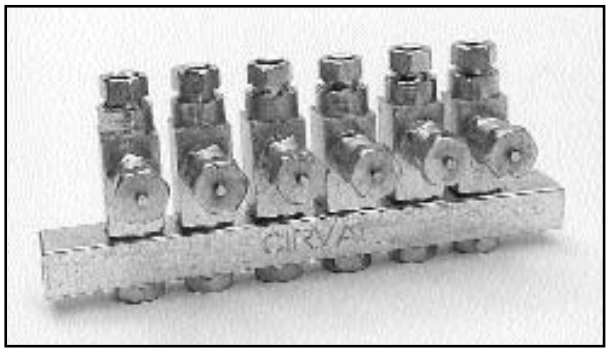

Description

CUL injectors are part of centralized lubrication systems used to deliver exact quantities of grease or oil to diffent points in a machine.
They can be made up as individual units or assembled on manifolds holding up to 6 units.
The easy quantity adjustment and external indication allows for fast and efficient control of the lubricant quantity independently from every injector..

Specifications

Lubricant	Oil or fluid greaseup to NLGI 1 grade	
CUL - 10	Oil	Grease
Regulable discharge	0,014 a 0,044 grs.	0,014 a 0,044 grs.
Min. Pressure	80 bar	80 bar
Max. Pressure	240 bar	240 bar
Recomm. pressure	100 bar	100 bar
Relief Pressure	15 bar	15 bar

Specifications

Lubricant	Oil or fluid greaseup to NLGI 1 grade	
CUL - 20	Oil	Grease
Regulable Discharge	0,014 a 0,114 grs.	0,014 a 0,114 grs.
Min. pressure	80 bar	80 bar
Max. pressure	240 bar	240 bar
Recomm. pressure	100 bar	100 bar
Relief Pressure	15 bar	15 bar

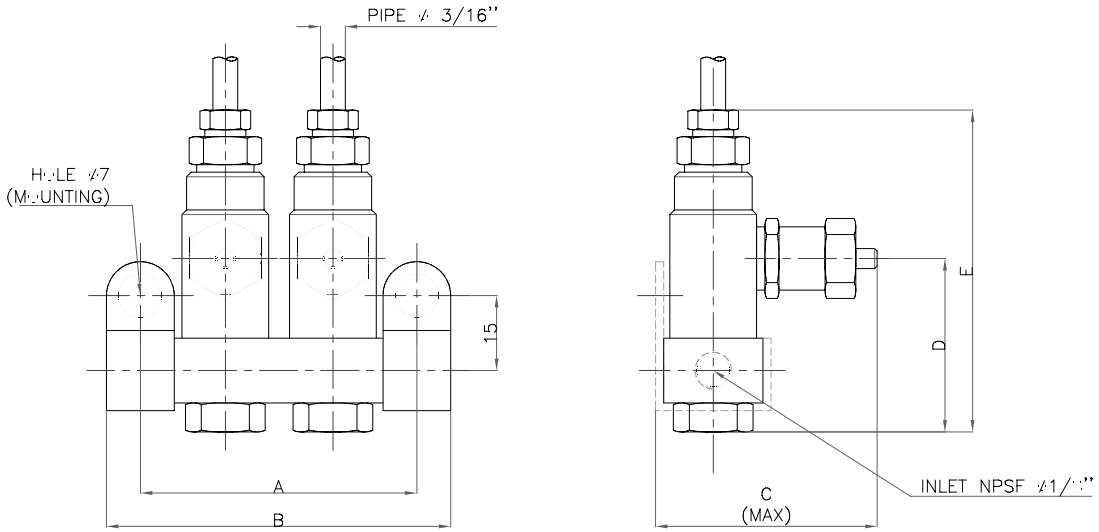

CUL-10		
Cant.	A	B
1	37	48
2	55	67
3	75	86
4	94	105
5	113	124
6	132	143

CUL-20		
Cant.	A	B
1	39	50
2	61	72
3	83	94
4	105	116
5	127	138
6	149	160

Mod.	CUL-10	CUL-20
C	43	52
D	35	51
E	73	90

Order example: CUL-10-A-2

Two CUL 10 injectors, for grease with its corresponding block.

Requirement Code

CUL -10 ☐ ☐ ☐

CUL-10	10
CUL-20	20

Grease	A
Oil	B

Dosimeter Quantity		
	Block for 1 Inyector	1
	Block for 2 Inyectors	2
	Block for 3 Inyectors	3
	Block for 4 Inyectors	4
	Block for 5 Inyectors	5
	Block for 6 Inyectors	6

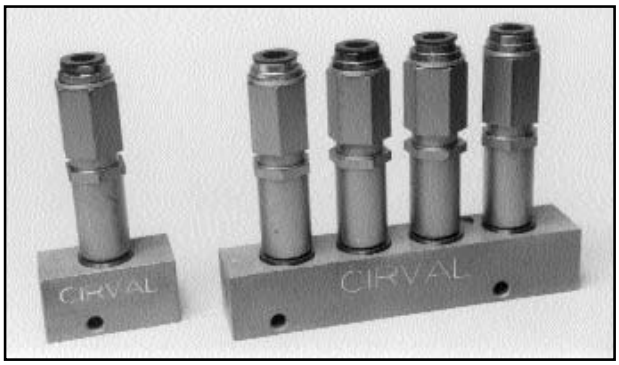

Descripción

CVCR injectors are part of a centralized lubricant system. They are used to deliver measured quantities of oil to different points of lubrication of a machine.
The units are assembled on manufolds.
The flow can be adjusted allowing a fast and efficient control of the lubrication in an independent way to every lubrication point.
Replacement: The injectors can be assembled on manifolds and are easily replaced without removing connections or lines.

Regulation: Turning the adjusting screw (clockwise) would decrease the inlet quantity of lubricant. Each turn is equal to 0.025 cm3.

Specifications

Lubricant	Oil
Regulable Discharge	0,025 a 0,400 cm³
Min. Pressure	20 bar
Max. Pressure	60 bar

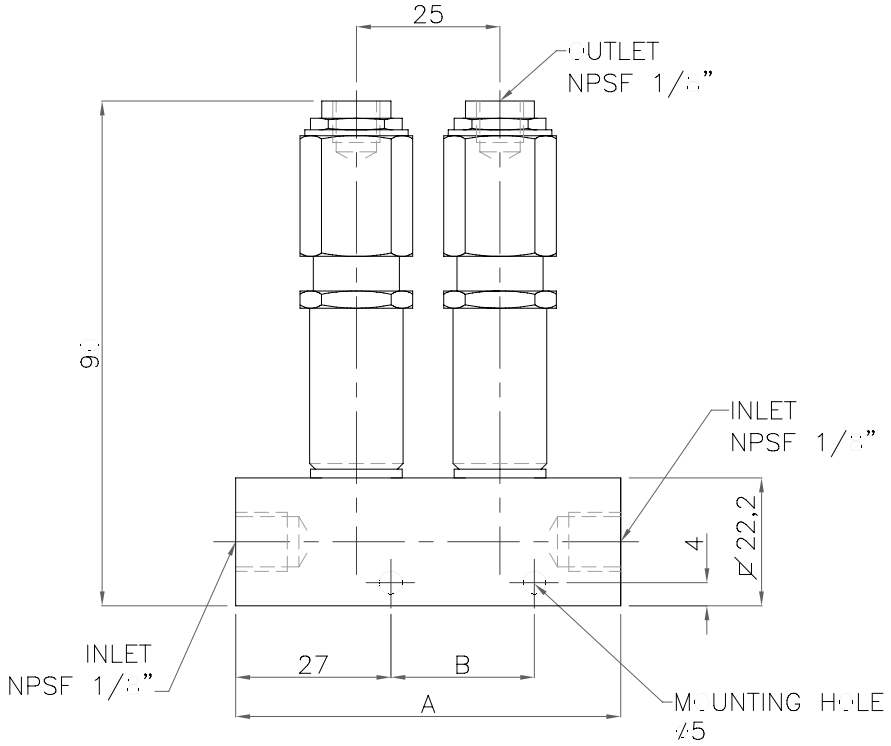

Modelo	A	B
CVCR-1	42	-
CVCR-2	67	25
CVCR-3	92	50
CVCR-4	117	75
CVCR-5	142	100
CVCR-6	167	125

Regul.	Flow
Mín.	cm³
Máx.	0,400 cm³

Requirement Code

CVCR ☐

Dosage Quantity	
Block for 1 Injector	1
Block for 2 Injectors	2
Block for 3 Injectors	3
Block for 4 Injectors	4
Block for 5 Injectors	5
Block for 6 Injectors	6

CSL 1 GREASE INJECTORS

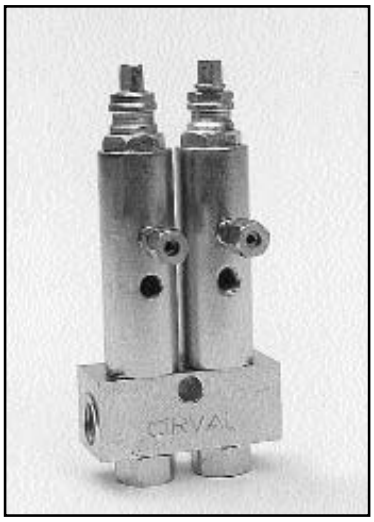

Description

CSL 1 injectors are designed to operate in a parallel single line centralized lubricant system.
These units operate in systems with pressures up to 240 Bar.
They are suitable for oil or grease up to NLGI 2.
The lubricant discharge capacity is adjustable through an external adjusting screw.
Each unit is also fitted with an indicator stem which confirms the operation of the injector.
CSL 1 injectors are fitted with a grease nipple and cap which can be used for manual lubrication.
The injectors are normally manifold mounted.

Specifications

Descharge		Operation Pressure				Conexions	
Min.	Máx.	Min.	Máx.	Typical	Relief	Inlet Block con.	Injector outlet
0.131 cm^3	1.31 cm^3	127 bar	241 bar	172 bar	41 bar	3/8 NPSF	1/8 NPSF

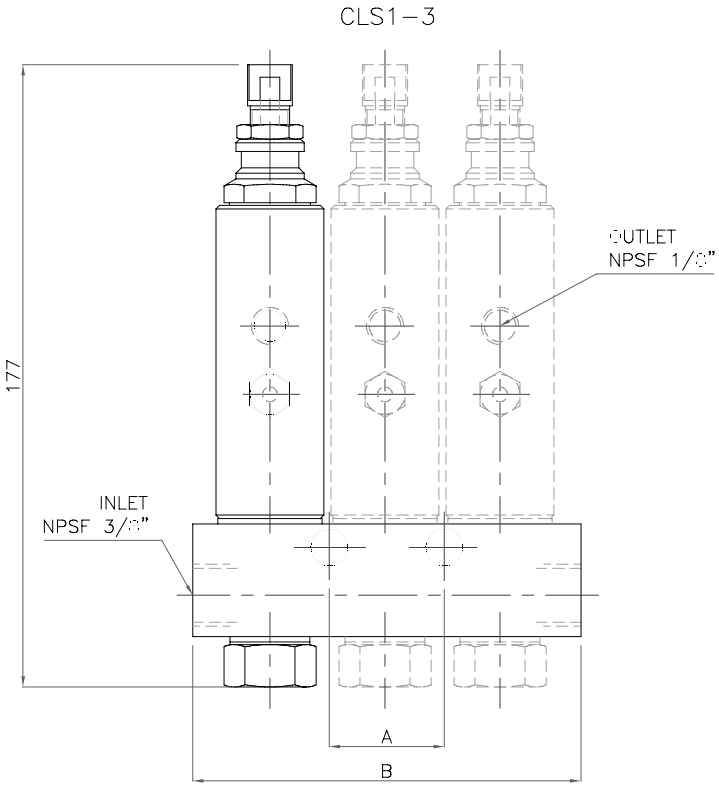

Model	"A"	"B"
CSL1-1	*	63
CSL1-2	*	76
CSL1-3	32	108
CSL1-4	63	140
CSL1-5	95	171
CSL1-6	127	203
CSL1-7	191	267
*IT HAS AN ALONE HOLE OF ASSEMBLY		

Example order CSL1-A-2

Two injectos CSL1 for grease with the corresponding block

Requirement Code

CSL 1 ☐ ☐

Lubricant	
Grease	A

Injector Quantity	
1 Injector	1
2 Injectors	2
3 Injectors	3
4 Injectors	4
5 Injectors	5
6 Injectors	6
7 Injectors	7

CSL 11 GREASE INJECTORS

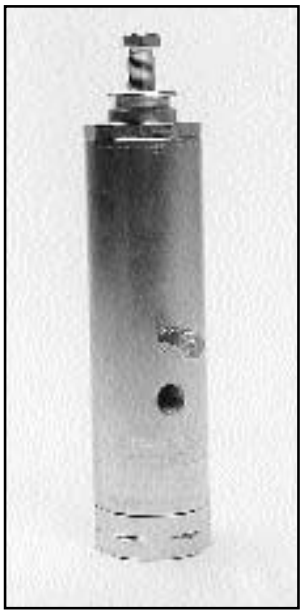

Description

CSL 11 injectors are designed to operate in a parallel single line centralized lubricant system.
These units operate in systems with pressures up to 240 Bar.
They are suitable for oil or grease up to NLGI 2.
The lubricant discharge capacity is adjustable through an external adjusting screw.
Each unit is also fitted with an indicator stem which confirms the operation of the injector.
CSL 11 injectors are fitted with a grease nipple and cap which can be used for manual lubrication.
Units have a 1/2” NPT female inlet connection.

Specifications

Mod. CSL-11

Discharge		Operation Pressure			
Min.	Máx.	Min.	Máx.	Típical	Relief
0.82 cm^3	8.2cm^3	69 bar	241 bar	172 bar	55 bar

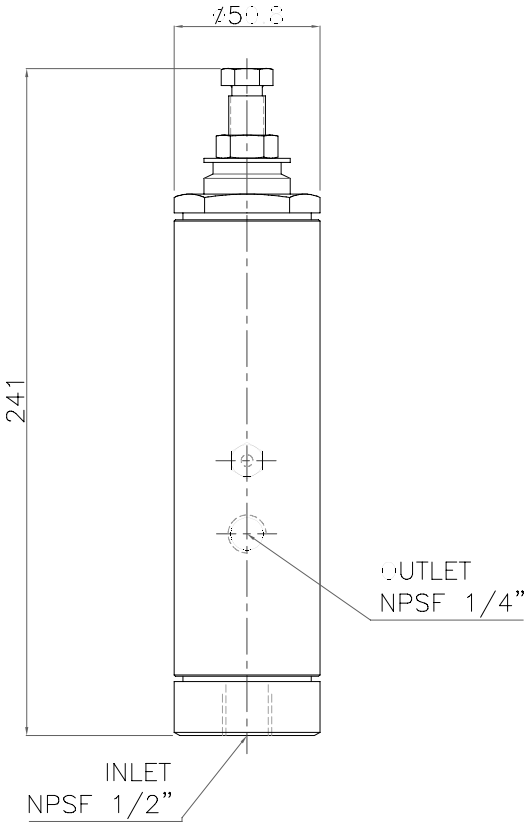

Requirement Code

CSL 11

CONTROL VALVE
Mod. CVA 850

Description

The model CVA 850 vent valve is used with CSL injectors.
They allow the pressure of the system to vent back to the reservoir once the system has operated.
During the system operation, air is applied to the vent valve closing the vent port and allowing the pump to develop the required system operating pressure.
Once the pressure has been reached, the pump stops, the air pressure is removed from the vent valve and the vent port opens.

Specification

Max. air pressure	8 bar (pneumatic)
Min. air pressure	3 bar (pneumatic)
Max. lub. pressure	262 bar (Hydráulic)
Assembly	Any position
Lubricant	Oil or grease up to NLGI 2 grade
Sup. treatment	Zinc Steel body / Aluminium Cover

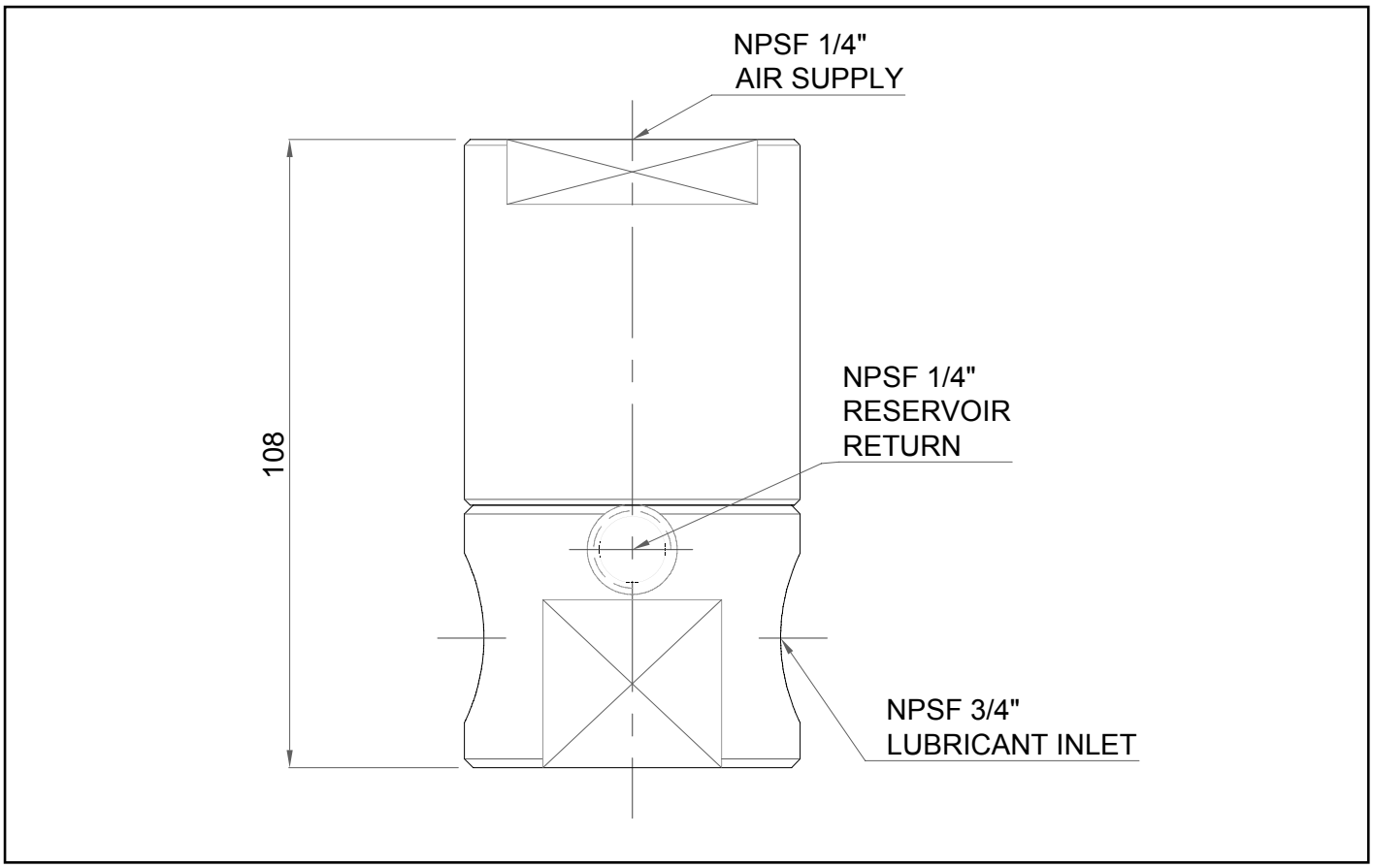

Code Requirement

CVA-850

Pumps and Centrals

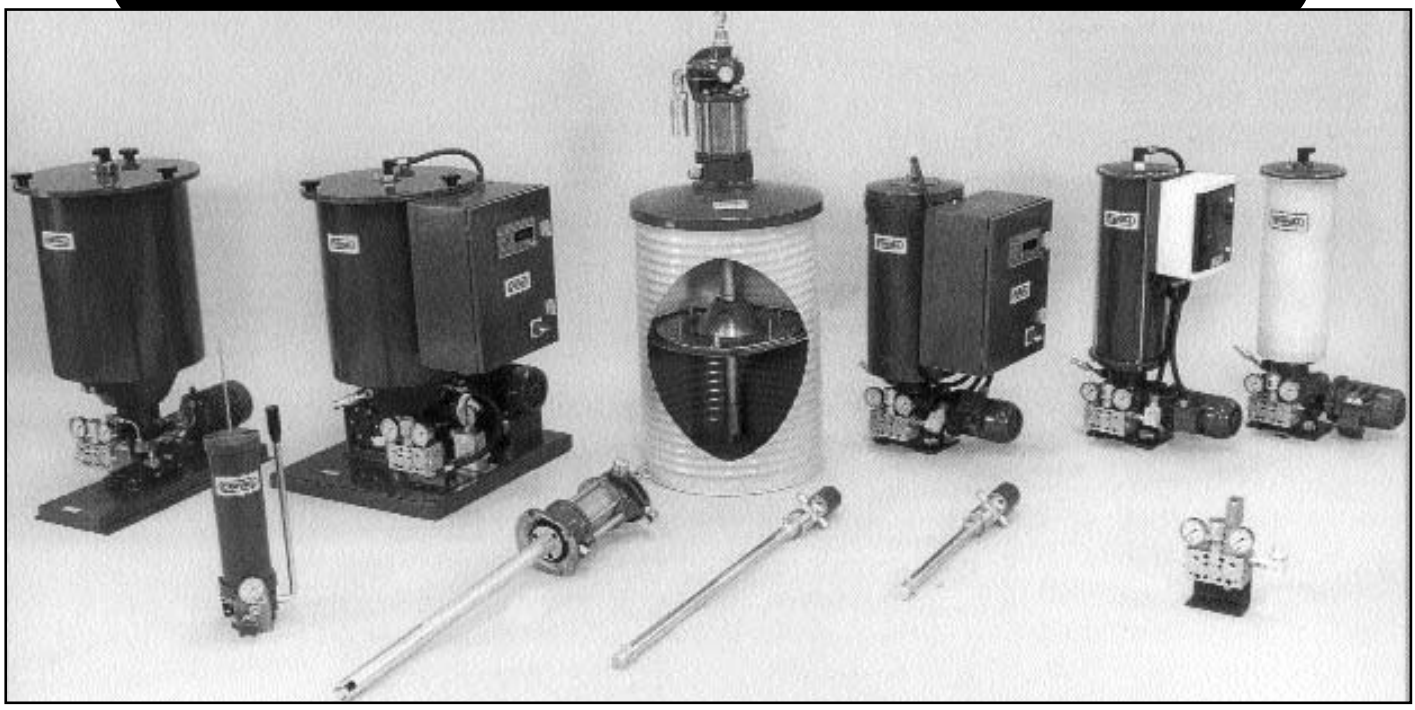

Dualine

Pump Sub-Assembly BCE-DJ4 and BCE-DJ5

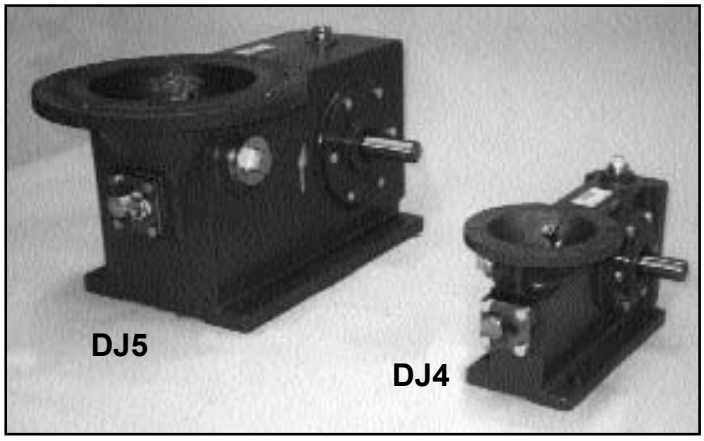

Description

These sub-assemblies utilises a double piston and cylinder set. They are suitable for all kinds of systems using grease or oil. The casings are made of cast iron. The drive shaft rotates in two angular contact bearings. Two eccentrics are fitted to the drive shaft. These operate the pistons via two connecting rods and two needle bearings. The double pistons and cylinder set allows operation without check valves.

Specificaciones

MODELS	BCE-J4	BCE-J5
Flow (Motor 50Hz)	462 cm³/min.	828 cm³/min.
Flow (Motor 60Hz)	563 cm³/min.	1010 cm³/min.
Operation Pressure	210 bar	210 bar
Max. pressure	250 bar	250 bar
Lubricant: Oil or grease up to NLGI 2 grade		

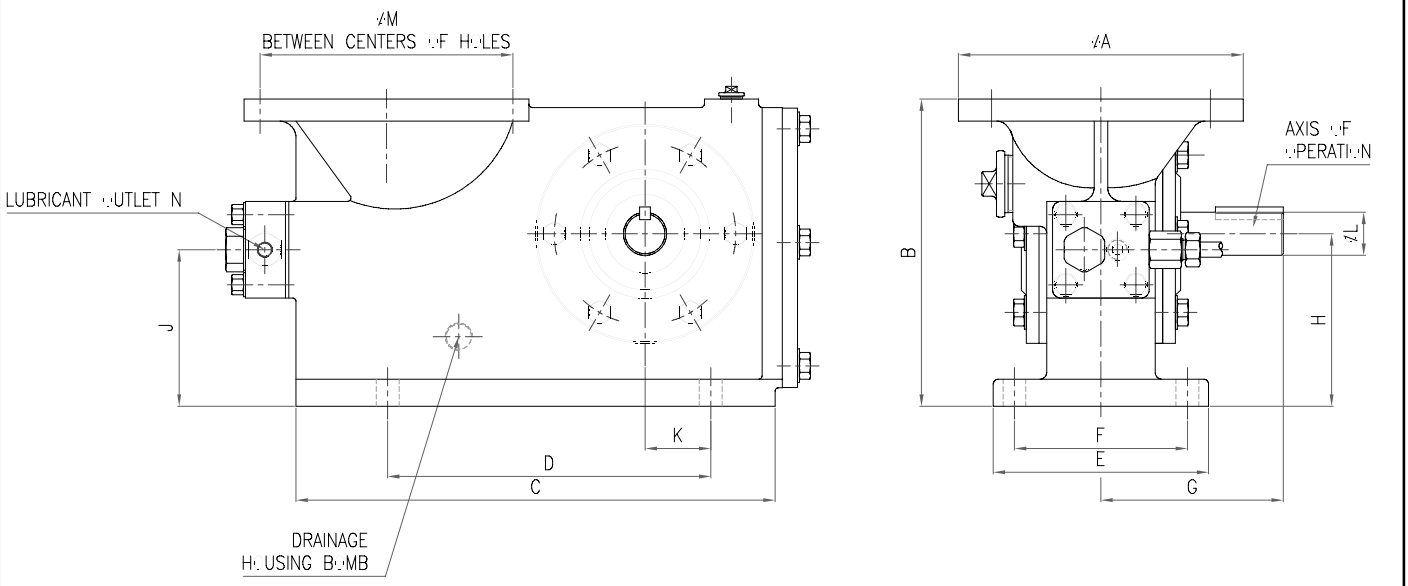

Model	øA	B	C	D	E	F	G	H	J	K	øL	øM	Conexión N
BCE-DJ-4	168	181	282,5	190,5	127	102	107	101,5	92,25	38,75	25,4	149	NPSF1/4”x18f/p.
BCE-DJ-5	342	295,5	440	387	280	203	203	165	157	82,5	31,75	298	NPSF1/2”x14f/p.

Example Order: Double piston pump BCE-DJ-4

Requirement Code for shirt and piston set

BCE-DJ-4 - CDJ-4505
BCE-DJ-5 - CDJ-5505

Requirement Code reparation STD kit

BCE-DJ-4 - CDJ-4506
BCE-DJ-5 - CDJ-5506

Requirement Code

BCE-DJ [ ]

Flow	
462/563 cm³/min.	4
828/1010 cm³/min.	5

Dualine

Central Pumping Station
Model ECB-DC-42

Description

The central pumping station model ECB-AD 42 has been designed to satisfy f the heavy industry. These can provide either oil or grease in almost any lubrication system application.
These stations include the BCE-DJ4 pump sub-assembly driven by a geared motor unit.
Assembled on sturdy base plate they are completed by a reversing valve and a relief valve if used as a dualine unit.
The robust base plate as well as the pump casing design allows the use of large reservoirs for both grease and oil. The large reservoirs allows for extended refill intervals.
Reservoirs can also include low and hi level indicationwith an automatic refilling option.

Specifications

Lubricant		Oil or grease up to NLGI 2 grade
Work pressure		Máx.: 250 bar
Relief pressure		Adjustable (max: 210 bar)
Pump BCE-J4	Motor 50 Hz	FLOW 462 cm³/min. MOTOR 1 HP - 220/380 V. - 50 Hz. - 1420 rpm
	Motor 60 Hz	FLOW 563 cm³/min. MOTOR 1 HP - 440 V. - 60 Hz. - 1730 rpm

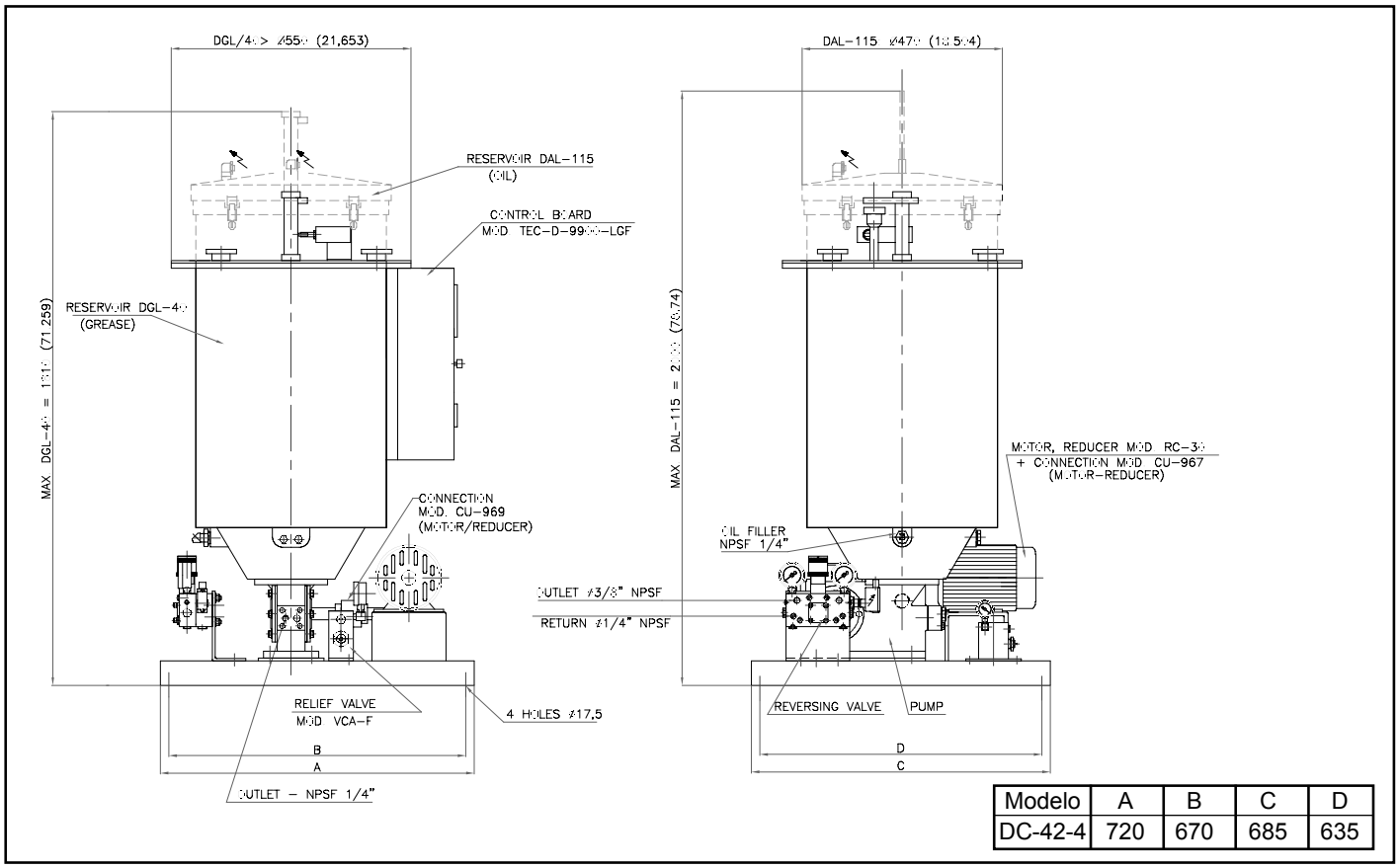

Modelo	A	B	C	D
DC-42-4	720	670	685	635

Order example: ECB-DC42-4-40-A4

Code Requirement

ECB-DC 42 ☐

Pump	
462/563 cm³	4

☐

Deposit	
DGL 40	40
DAL 115	115

☐

Lubricant	
Grease	A
Oil	B

☐

Revers. Valve	
S. Líne	0
VCIR-40	4

Double piston pump
Mod. BCE-DJ25

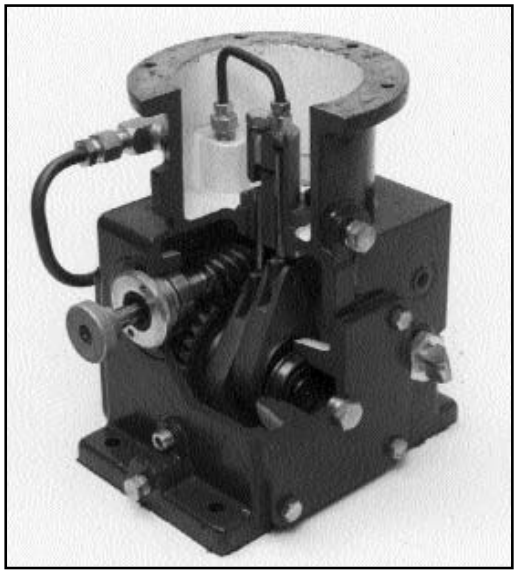

Description

These sub-assemblies utilises a double piston and cylinder set. They are suitable for all kinds of systems using grease or oil.
The casings are made of cast iron. The drive shaft is fitted with a worm drive. The secodary shaft is fitted with a drive wheel andis located by two angular contact bearings. Two eccentrics are fitted to the secondary shaft. These operate the pistons via two connecting rods and two needle bearings. The double pistons and cylinder set allows operation without check valves.

Specificaciones

Pump Model BCE-DJ25		
Type: Dual piston ans cylinder set with internal reduction.		
	1	2
Flow (Motor 50 Hz)	87 cm³/min.	280 cm³/min.
Flow (Motor 60 Hz)	106 cm³/min.	341 cm³/min.
Work Pressure	Máx.: 250 bar	
Relief Pressure	Adjustable (Máx. 210 bar)	
Lubricant	Oils or grease up to NLGI 2 grade	

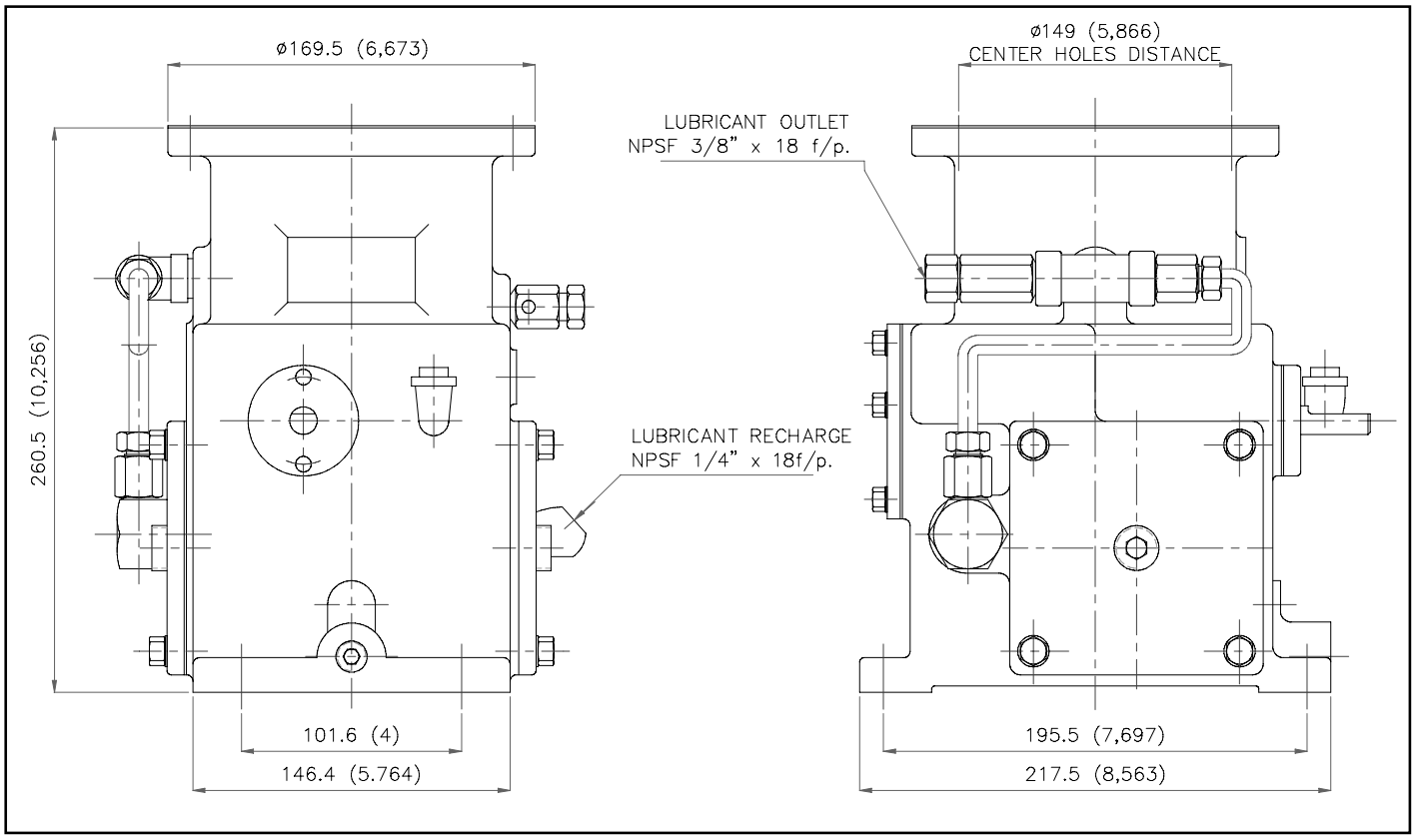

Example : Cirval Pump BCE-DJ25-1

Requirement code shirt and piston set

BCE-DJ25-1 - CB-9133
BCE-DJ25-2 - CB-9233

Requirement code Reparation STD set

BCE-DJ25-1 - CB-9134
BCE-DJ25-2 - CB-9234

Requirement Code

BCE-DJ25 - ☐

Flow	
87/106 cm³/min.	1
280/341 cm³/min.	2

12012006

Dualine

Prog. Line

PUMPING CENTRAL STATION
MODEL ECB-DC25

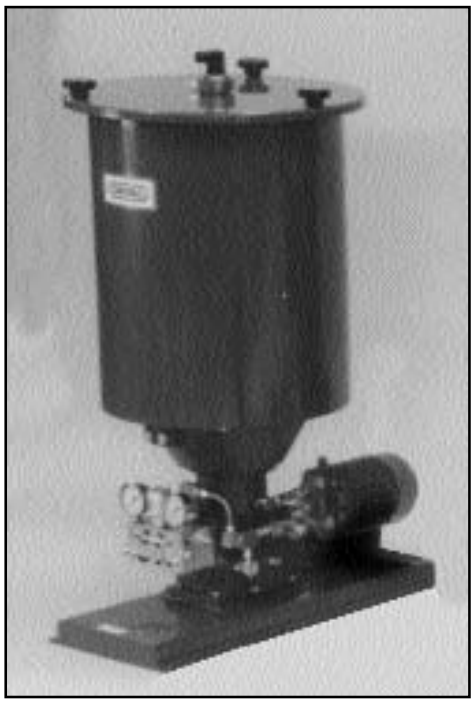

Description

The central pumping station model ECB-AD 25 has been designed to satisfy f the heavy industry. These can provide either oil or grease in almost any lubrication system application.
These stations include the BCE-DJ25 pump sub-assembly driven by an electric motor.
Assembled on sturdy base plate they are completed by a reversing valve and a relief valve if used as a dualine unit.
The robust base plate as well as the pump casing design allows the use of large reservoirs for both grease and oil. The large reservoirs allows for extended refill intervals.
Reservoirs can also include low and hi level indication with an automatic refilling option.

Specifications

Lubricant		Oil or grease up to NLGI 2 grade
Work pressure		Máx.: 250 bar
Relief pressure		Adjustable (max: 210 bar)
Pump BCE-J25 (1)	Motor 50 Hz	FLOW 87 cm³/min. MOTOR 1 HP - 220/380 V. - 50 Hz. - 1420 rpm
	Motor 60 Hz	FLOW 106 cm³/min. MOTOR 1 HP - 440 V. - 60 Hz. - 1730 rpm
Pump BCE-J25 (2)	Motor 50 Hz	FLOW 280 cm³/min. MOTOR 1 HP - 220/380 V. - 50 Hz. - 1420 rpm
	Motor 60 Hz	FLOW 341 cm³/min. MOTOR 1 HP - 440 V. - 60 Hz. - 1730 rpm
Reservoir Capacity		Mod. DAL-30: 30 Lts. - Mod. DAL-115: 115 Lts. (Oil) Mod. DGL-40: 40 Kg. (Grease)

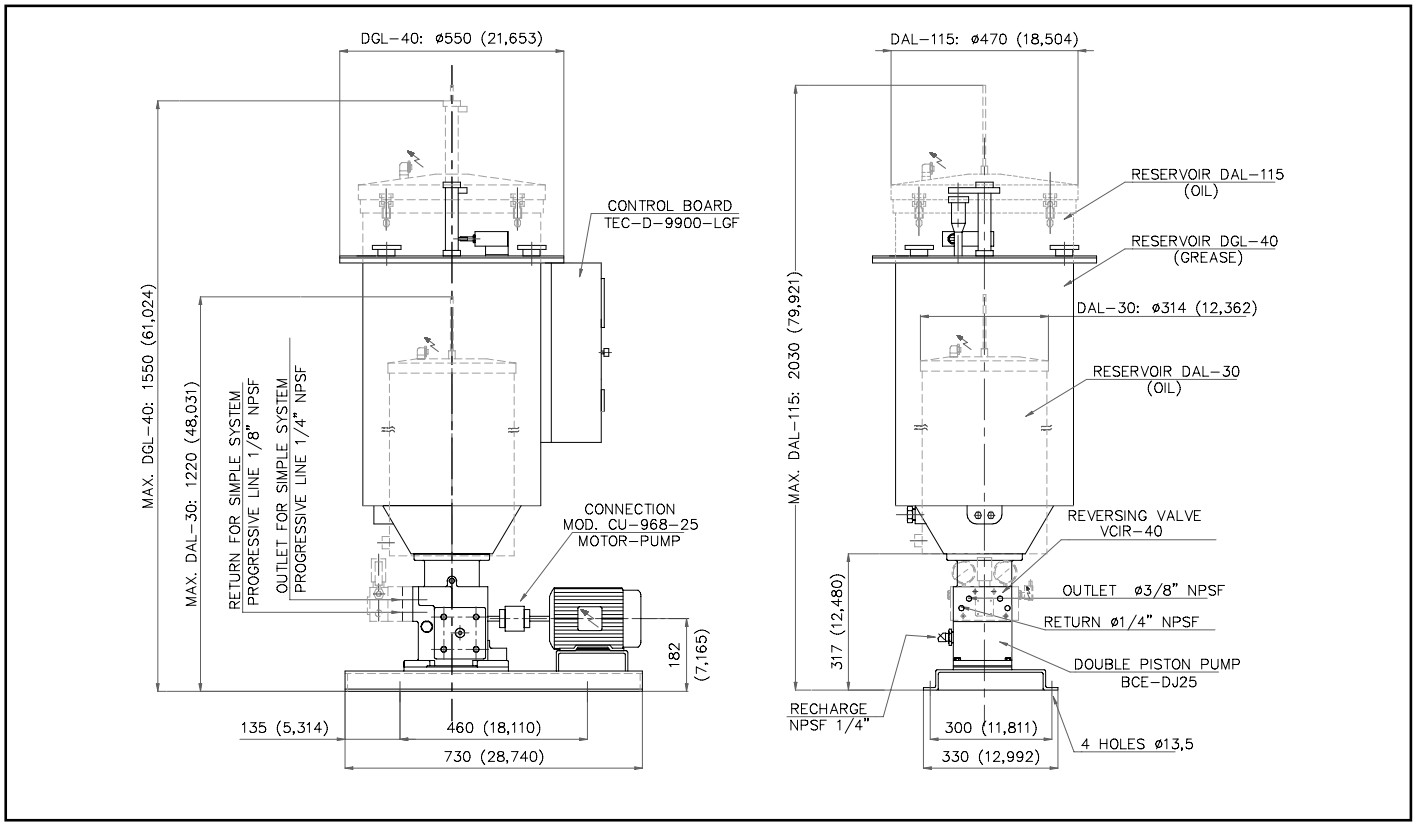

Example :

ECB-DC25-2-40-A-4

Requirement Code

ECB-DC25 - ☐ - ☐ - ☐ - ☐

Flow	
87/106 cm³	1
280/341 cm³	2

Reservoir	
DGL 40	40
DAL 30	30
DAL 115	115

Lubricant	
Grasa	A
Aceite	B

Rev. Valve	
S. Líne	0
VCIR-40	4

Dualine

Double Piston Pump
Model BCE-DJ10

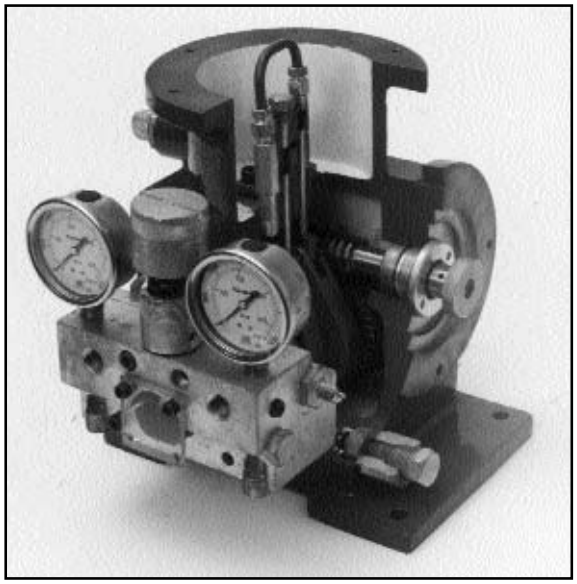

Description

These sub-assemblies utilises a double piston and cylinder set. They are suitable for all kinds of systems using grease or oil.
The casings are made of cast iron. The drive shaft is fitted with a worm drive. The secodary shaft is fitted with a drive wheel and is located by two angular contact bearings. Two eccentrics are fitted to the secondary shaft. These operate the pistons via two connecting rods and two needle bearings. The double pistons and cylinder set allows operation without check valves.

Specifications

Pump Model BCE-DJ10			
Type: Piston and cylinder.			
	1	2	3
Flowl (Motor 50 Hz)	87 cm³/min.	45 cm³/min.	22 cm³/min.
Flow (Motor 60 Hz)	106 cm³/min.	55 cm³/min.	28 cm³/min.
Work Pressure	Máx.> 250 bar		
Relief Pressure	Adjustable (Máx. 210 bar)		
Lubricant	Oil or grease up to NLGI 2 grade		

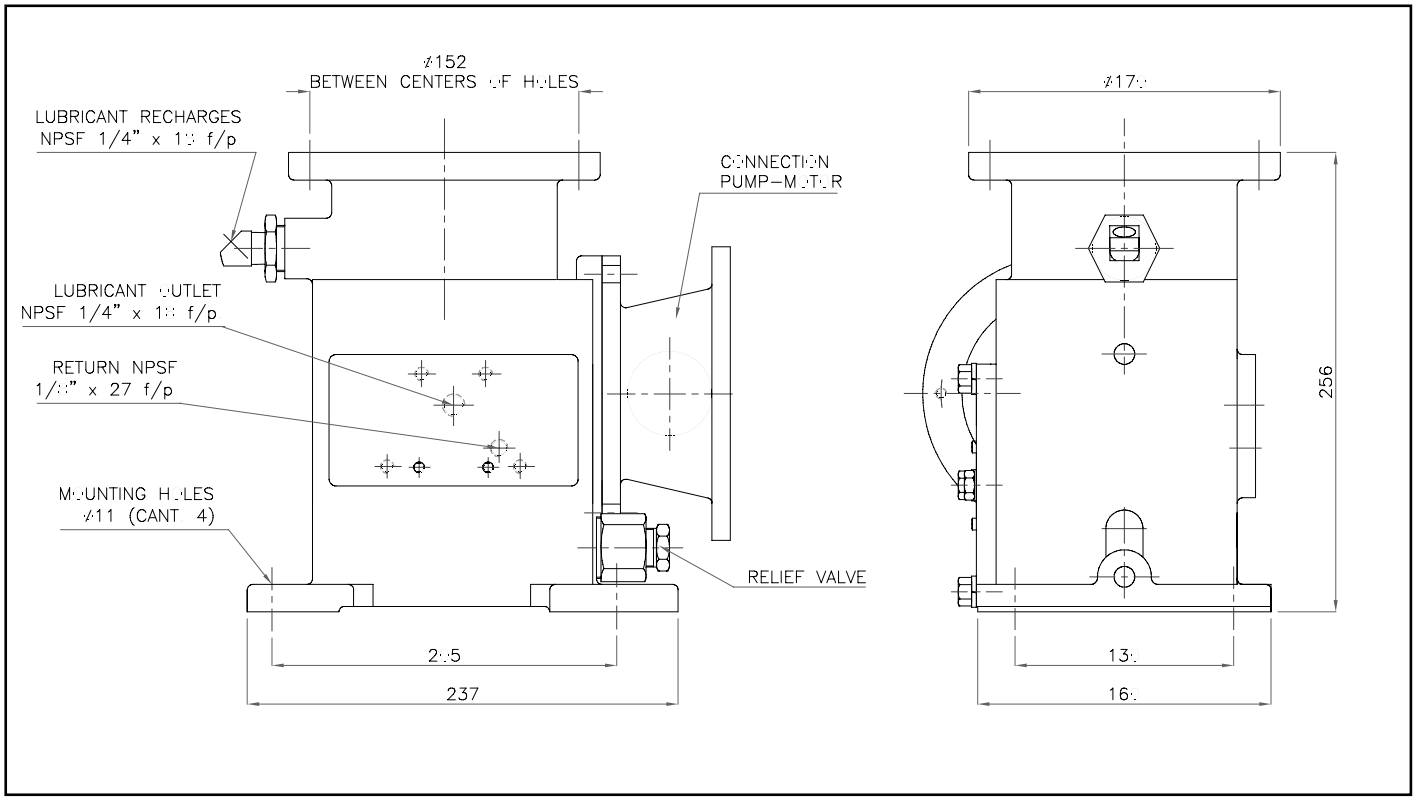

Example Order> Pump Cirval BCE-DJ-10-1

Requirement Code for shirt and piston set

BCE-DJ-10-1 - CB-9133
BCE-DJ-10-2 - CR-9233
BCE-DJ-10-3 - CR-9333

Requirement Code STD Reparation

BCE-DJ-10-K

Requirement Code

BCE-DJ10 [ ]

Flow	
87/106 cm³/min.	1
45/55 cm³/min.	2
22/28 cm³/min.	3

Central Station Pump
Modelo ECB-DC-10

Description

The central pumping station model ECB-DC 10 has been designed to satisfy the industry. These can provide either oil or grease in almost any lubrication system application.
These stations include the BCE-DJ10 pump sub-assembly driven by an electric motor.
Assembled on sturdy base plate they are completed by a reversing valve and a relief valve if used as a dualine unit.
The robust base plate as well as the pump casing design allows the use of large reservoirs for both grease and oil. The large reservoirs allows for extended refill intervals.
Reservoirs can also include low and hi level indication with an automatic refilling option.

Specifications

Lubricant		Oil or grease up to NLGI 2 grade
Work Pressure		Máx: 250 bar
Relief Pressure		Adjustable (máx: 210 bar)
Pump BCE-J10 (1)	Motor 50 Hz	FLOW 87 cm³/min. MOTOR 0,5 HP - 220/380 V. - 50 Hz. - 1405 rpm
	Motor 60 Hz	FLOW 106 cm³/min. MOTOR 0,5 HP - 440 V. - 60 Hz. - 1710 rpm
Pump BCE-J10 (2)	Motor 50 Hz	FLOW 45 cm³/min. MOTOR 0,5 HP - 220/380 V. - 50 Hz. - 1405 rpm
	Motor 60 Hz	FLOW 55 cm³/min. MOTOR 0,5 HP - 440 V. - 60 Hz. - 1710 rpm
Pump BCE-J10 (3)	Motor 50 Hz	FLOW 22 cm³/min. MOTOR 0,5 HP - 220/380 V. - 50 Hz. - 1405 rpm
	Motor 60 Hz	FLOW 28 cm³/min. MOTOR 0,5 HP - 440 V. - 60 Hz. - 1710 rpm
Deposit Capacity		Mod. DAL-30 (steel) : 30 Lts. (oil) Mod. DGL-10 (steel) : 10 Kgs (grease)

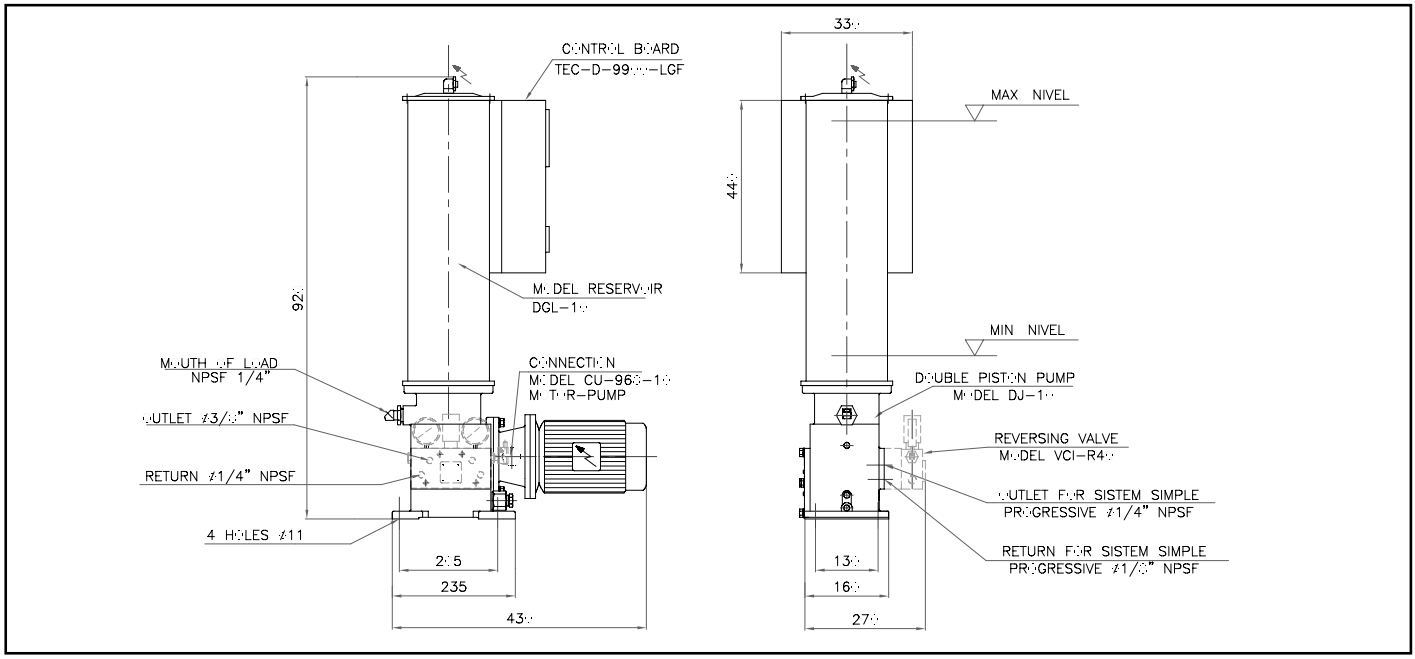

Order example:

ECB-DC10-2-10-A-4

Requirement Code

ECB-DC 10 ☐

Pump	
87/106 cm³	1
45/55 cm³	2
22/28 cm³	3

Deposit	
DGL-10	10
DAL-30	30

Lubricant	
Grasa	A
Aceite	B

Rev. Valve	
S. Línea	0
VCIR-40	4

Manual Pump Mod. BCM-A1-A/B

Description

These robust manual pumps are designed for heavy duty applications. They can supply lubricant in a reliable way at high pressure to distributors in single and dualine systems.
Ideal for those systems that requires manual centralized lubrication.
They operate with oil or grease. Reservoir are fitted with floats or follower plates and three different sizes are available. A visual level indicator is fitted.

Specifications

Lubricant	Oil or grease up to NLGI 2 grade		
Discharge	5 cm³ x piston displacement		
Reservoir Capacity	Model	Grease (Kg)-A	Oil (cm³)-B
	4 A 1	2,7	3000
	5 A 1	4,2	4500
	6 A 1	6,4	7000
Max. work pressure	350 bar		

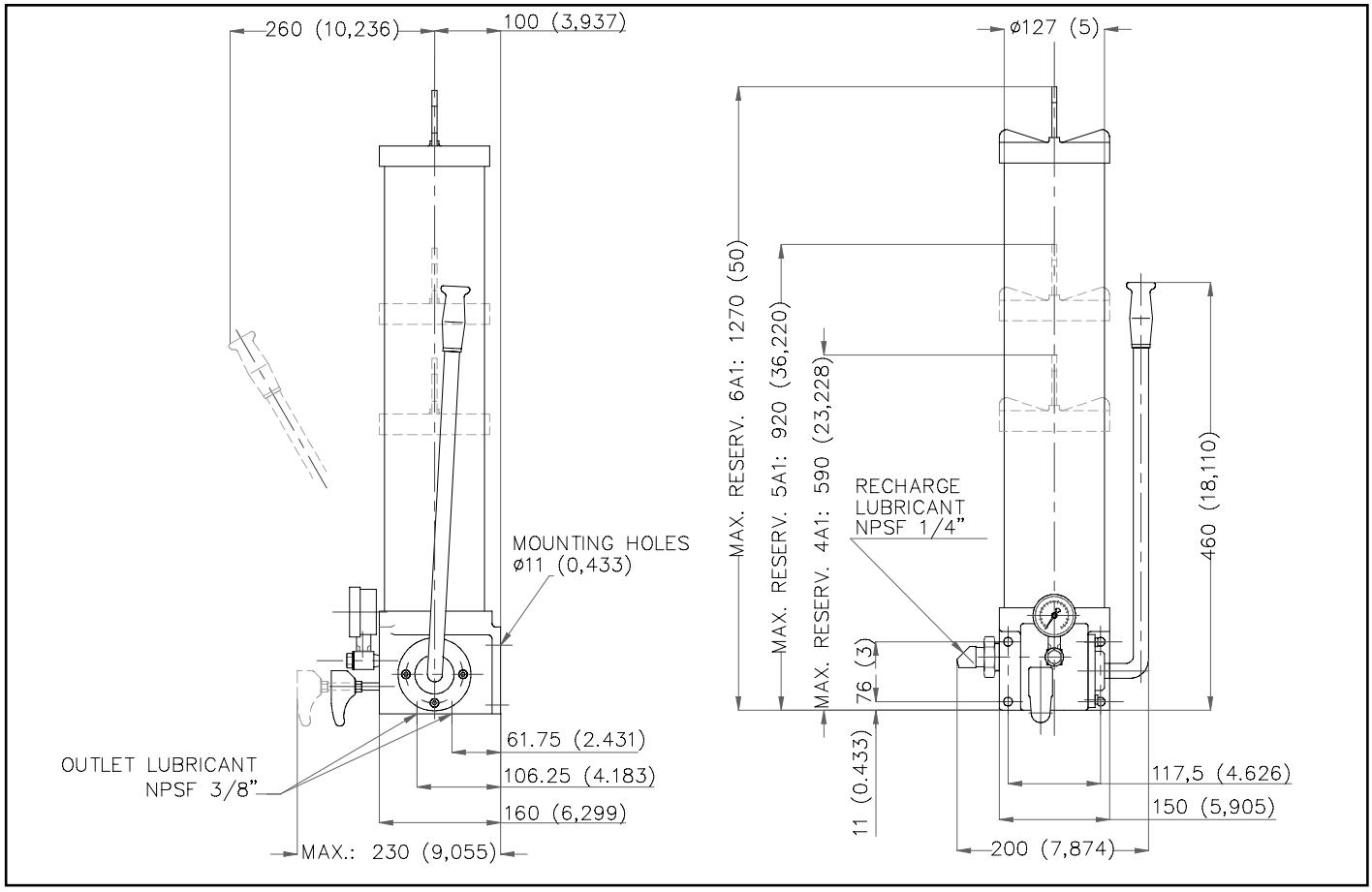

Example : BCM-DL-5A1-A

Manual pump double line to grease and reservoir of 4,2 Kg.

Requirement Code for body and piston kit

CDA-4046-1

Requirement Code for STD reparation kit STD

CDA-4045-1

Requirement Code

BCM - [ ] - [ ] A1 - [ ]

System	
D. Líne	DL
S.Líne	SL

Reservoir		
	Grease	Oil
4	2,7 Kg	3000 cm³
5	4,2 Kg	4500 cm³
6	6,4 Kg	7000 cm³

Lubricant	
Grease	A
Oil	B

Manual Pump
BCMSL

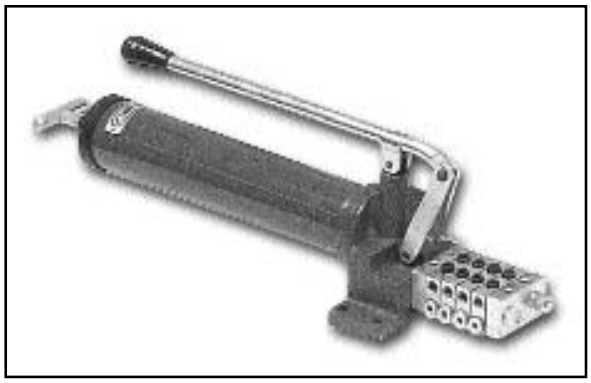

Description

A manually operated pump with an incorporated single line progressive valve. They can feed from 1 to 16 lubrication points on a machine. Correctly measured quantities of lubricant is delivered to each point.
A practical and economical system that can be applied to machines suitable for manual lubrication systems.
This system also helps to prevent over lubrication.
System kits are available for machines in the agricultural industry.
Once installed the operator can lubricate the machine even when it is operating.

Dosage per lubrication point		
STANDARD	MJ-10	0,16 cm³/Cycle
ORDER	MJ-5	0,08 cm³/Cycle
	MJ-15	0,25 cm³/Cycle

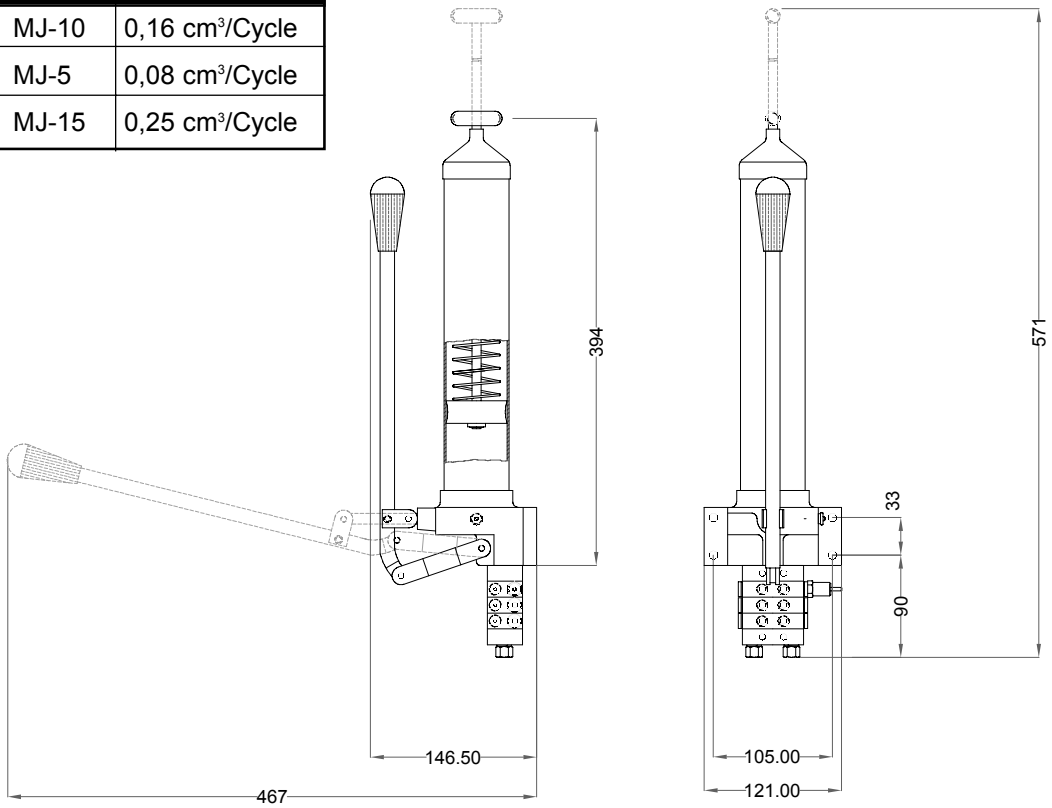

Order example: BCMSL-1A1-A-MJ-5

Manual operated pump with 500 gram grease reservoir and distributor model MJ-5 serving up to 10 lubrication points.

Requirement Code for body and piston kit

CDA-1046-1

Requirement Code for reparation STD kit

CDA-1045-1

Requirement Code

BCMSL-1A1 [ ] - MJ - [ ]

Lubricant	
Grease	A
Oil	B

Module Quantity	
Up to 6 points	3
Up to 8 points	4
Up to 10 points	5
Up to 12 points	6
Up to 14 points	7
Up to 16 points	8

Pneumatic/Hydraulic Operated Lubrication Pump BCN/BCH

Simple Line Bomb BCN-AC-1/2

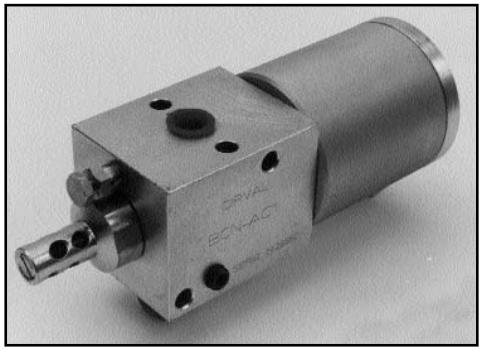

General Dimensions- Pneumática Pump

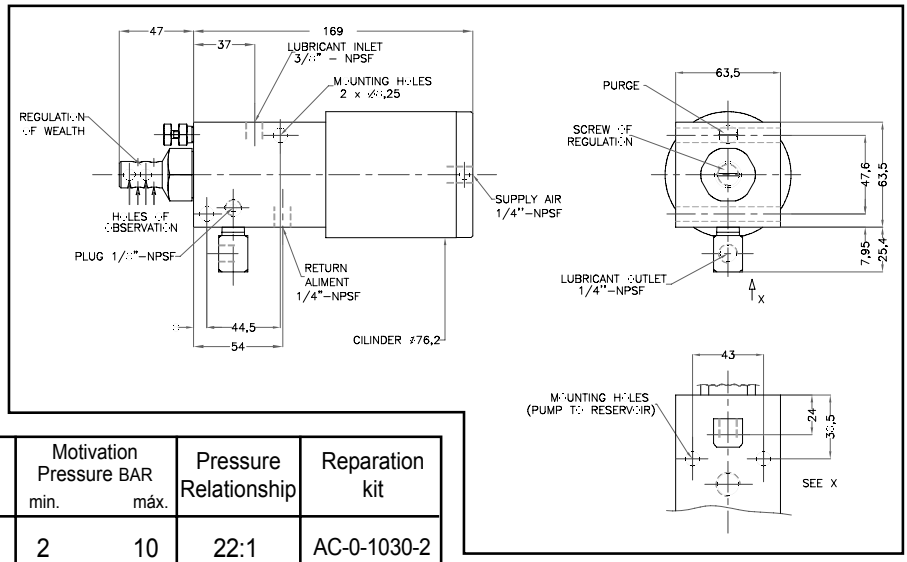

Pneumática Pump

Mod. BCN	Return Line	Discharge Hub (cm3) min.	máx.	Force per motivation	Motivation Pressure BAR min.	máx.	Pressure Relationship	Reparation kit
AC-01	Spring	0,70	3,20	Pneumátic	2	10	22:1	AC-0-1030-2
AC-02	Pneumátic							
AC-11	Spring	0,45	2,20		2	10	35:1	AC-1-1030-2
AC-12	Pneumátic							
AC-21	Spring	0,13	0,70		2	10	100:1	AC-2-1030-2
AC-22	Pneumátic							

Pneumatic and hydraulic operated pumps used in various applications, They can be adapted to different models of grease or oil reservoirs. Used mainly in single line progressive systems. These pumps are very robust. They have an adjustable discharge capacity. The positive displacement piston and cylinder set guarantees a measured quantity of lubricant even at very high operating pressures.

Requirement Code

BCN-AC [ ]

Flow 0,70-3,20	0
Flow 0,45-2,20	1
Flow 0,13-0,70	2

[ ]

Return	
Spring	1
Pneumátic	2

Example Order: BCN-AC-1-2

Pneumatic Pump BCN, with flow 0,45 a 2,2 cm³ with pneumatic return.

Simple Line Pump BCH-TP

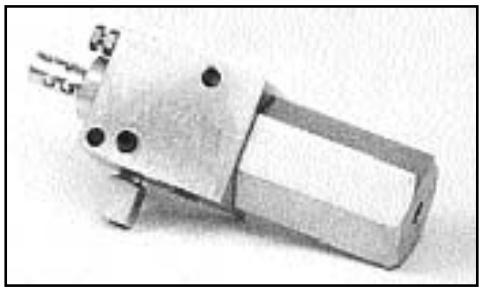

General Dimensions - Hydraulic pump

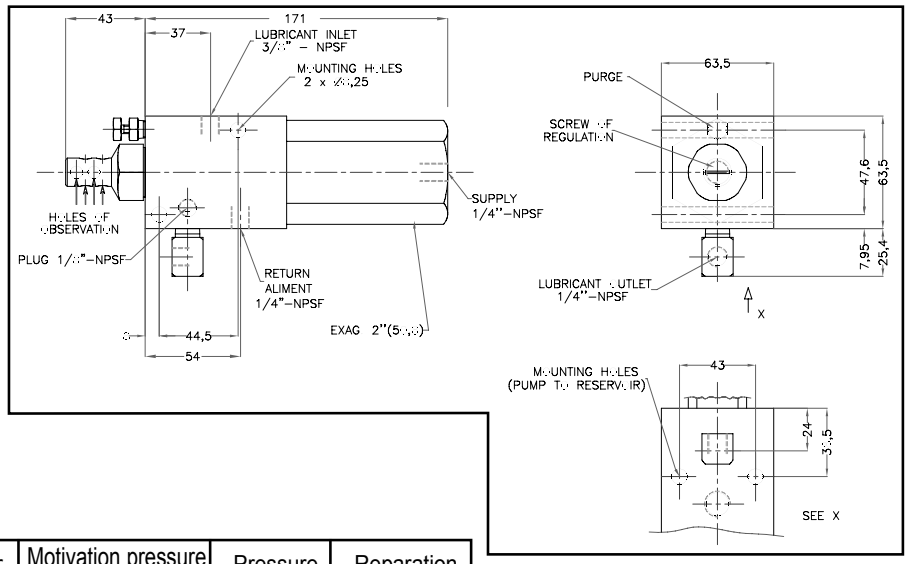

Hydraulic Pump

Mod. BCH	Return Action	Discharge per hub (cm³) min.	máx.	Force per motivation	Motivation pressure (Kg./cm²) min.	máx.	Pressure Relationship	Reparation Kit
CT1-1	spring	0,29	1,05	Hidráulica	17,5	140	6:1	CT-1-1030-2
CT1-2	hidráulic	0,29	1,05		7	140		
CT2-1	spring	0,57	2,78		21	140	2:1	CT-2-1030-2
CT2-2	hidráulic	0,57	2,78		14	140		

Requirement Code

BCH-CT [ ]

Flow	
0,29 - 1,05	1
0,57 - 2,78	2

[ ]

Return	
Spring	1
Hydraulic	2

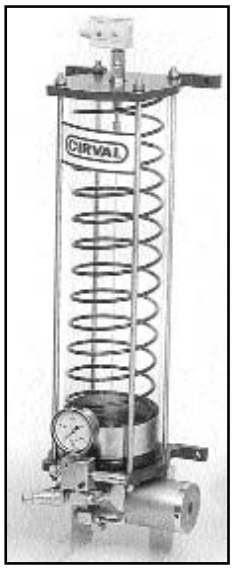

General Dimensions - Pumping Stations for grease

These central pumping stations can consist of several combinations of reservoirs and pumps. On the tables below the various combination can be seen.
These units can feed large machines with varied quantity of lubrication points.
They can be operated either by the machine cycle,a system controller or a PLC.
Operating methods should however guarantee the appropriate lubrication of the equipment.

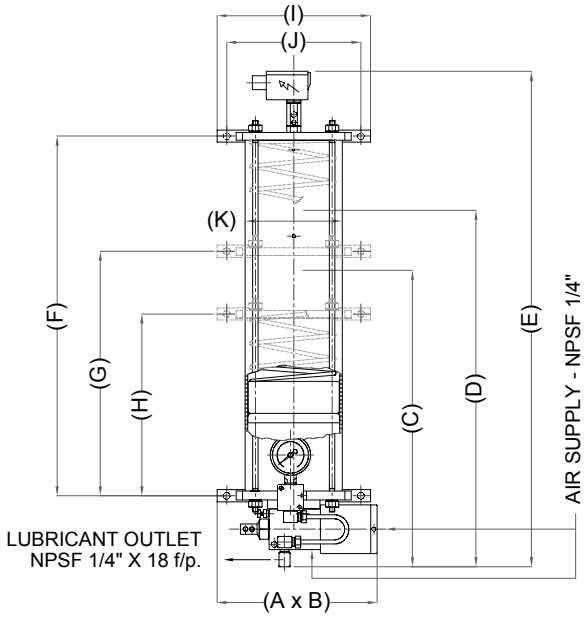

Mod.	(AxB) (Ancho x Prof.)	(C)	(D)	(E)	(F)	(G)	(H)	(I)	(J)	(K)
ECB-X-TP-28-A	250,5 x 160	500					283	190	165	102
ECB-X-TP-30-A	250,5 x 160		598			382		190	165	102
ECB-X-TP-32-A	250,5 x 213,5		598			382		240	210	152
ECB-X-TP-34-A	250,5 x 213,5			778	562			240	210	152

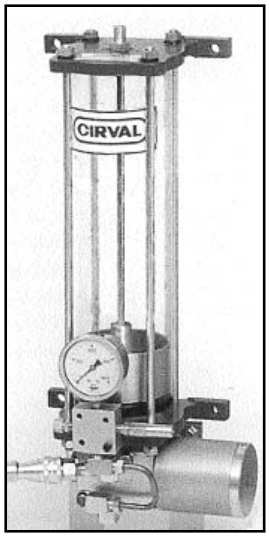

General Dimensions - Pumping Stations for oil

Mod.	(AxB) (Ancho x Prof.)	(C)	(D)	(E)	(F)	(G)	(H)	(I)	(J)	(K)
ECB-X-TP-28-B	250,5 x 160	442					283	190	165	102
ECB-X-TP-30-B	250,5 x 160		540			382		190	165	102
ECB-X-TP-32-B	250,5 x 213,5		540			382		240	210	152
ECB-X-TP-34-B	250,5 x 213,5			720	562			240	210	152

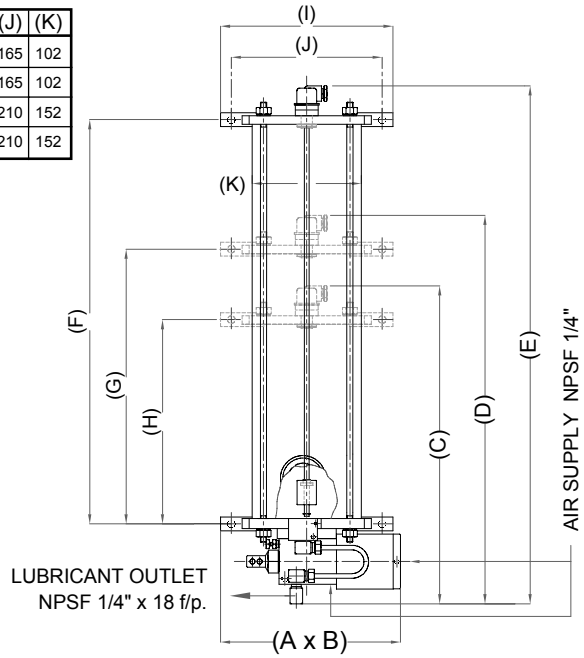

Requirement Code

ECB [ ]

Pump	
BCN-AC-01	1
BCN-AC-02	2
BCN-AC-11	3
BCN-AC-12	4
BCN-AC-21	5
BCN-AC-22	6
BCH-CT-11	11
BCH-CT-12	12
BCH-CT-21	21
BCH-CT-22	22

TP [ ]

Deposit Capacity		
Grease	Oil	
1,300 Kg.	1,700 cm³	28
1,800 Kg.	2,500 cm³	30
4,00 Kg.	5,800 cm³	32
6,500 Kg.	8,300 cm³	34

[ ]

Lubricant	
Grease	A
Oil	B

Example Order:

ECB-2-TP-34-A

Central Pumping Station, consisting of BCN-AC-2 pump and an acrylic grease reservoir of 6,5 Kgs. capacity.

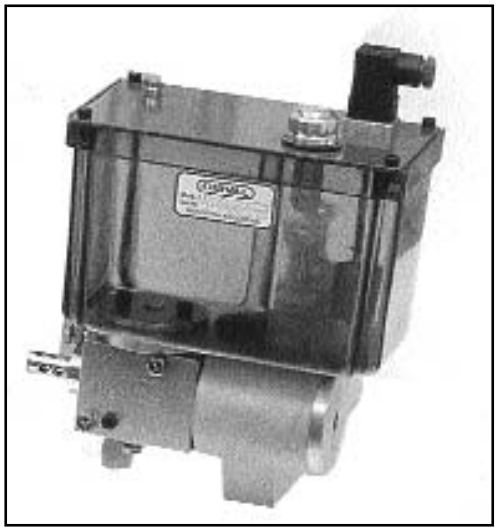

General dimensions of Pumping Central with policarbonate deposit

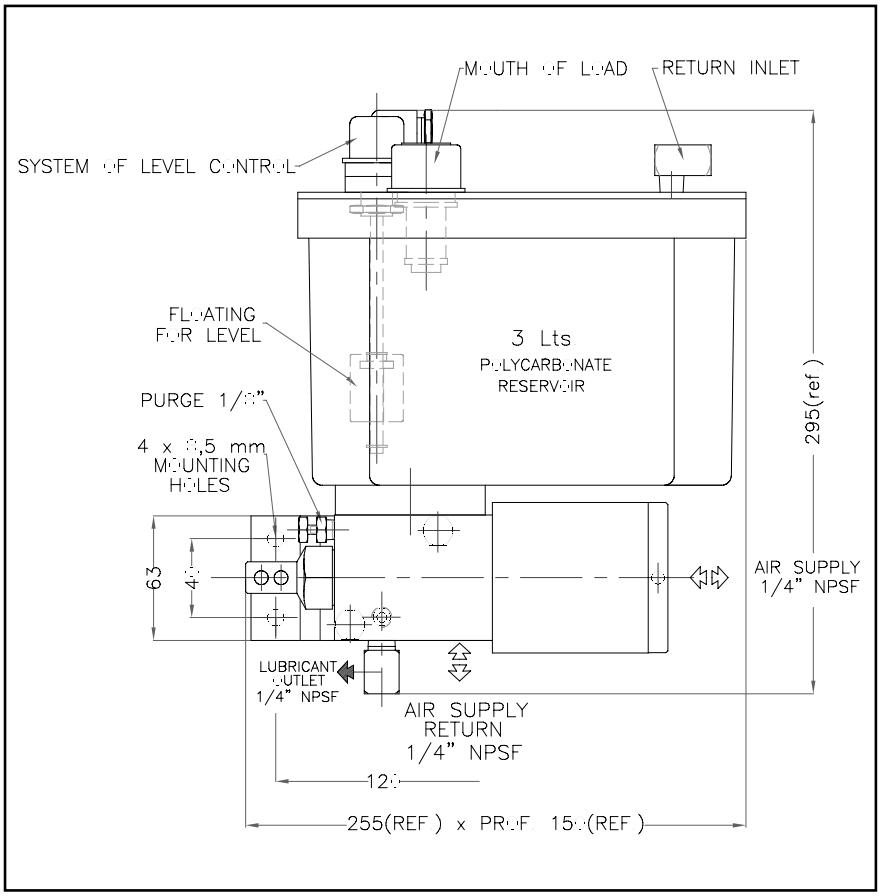

Central Pumping Stations with different types of oil reservoirs.
Example Order: ECB-1-P-1
Central Pumping Statons model ECB-1-M-1 consistin of one pneumatic operated pumpmodel BCN-AC-01 fitted to a 3 liter polycarbon reservoir.

General dimension of Pumping Central with metallic deposit

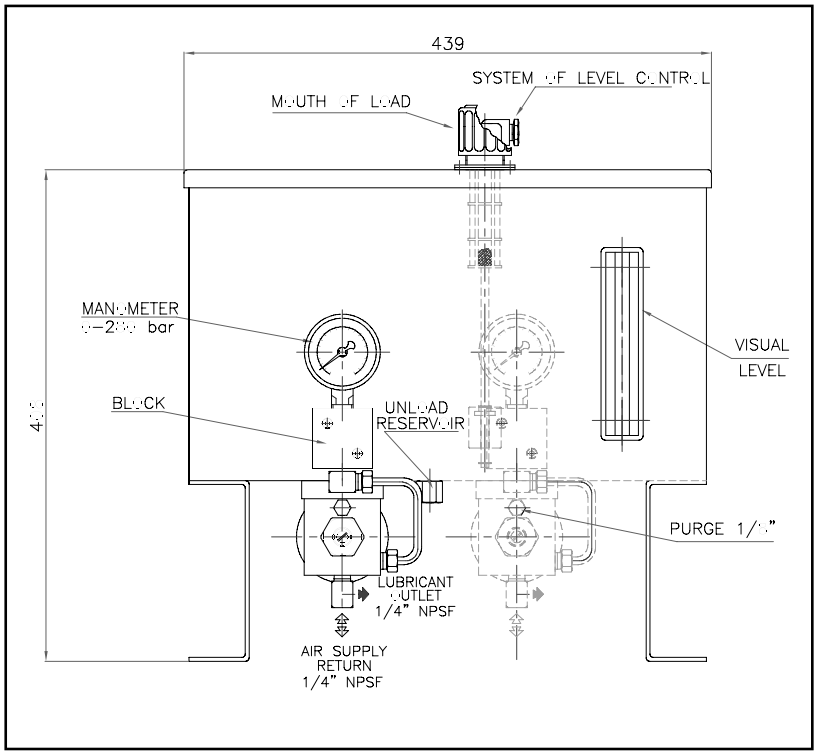

Requirement Code

ECB

Pump	
BCN-AC-01	1
BCN-AC-02	2
BCN-AC-11	3
BCN-AC-12	4
BCN-AC-21	5
BCN-AC-22	6
BCH-CT-11	11
BCH-CT-12	12
BCH-CT-21	21
BCH-CT-22	22

Deposit	
Policarbonate 3 Lts.	P
Metallic 15 Lts.	M

Pump Quantity	
1 pump	1
2 pump	2

Order example: ECB-1-M-1

Central Pumping Stationl Model ECB-1-M-1 consisting of one pneumatic operated pump model BCNAC-01 fitted to a 15 liter steel reservoir.

Central pumping Station
Mod. ECB-AC-3

Description

Lubricant dosing units suitable for either grease or oil. Use when a component requires between 2,3 and 30 cubic centimeters of lubricant. Two versions available.

Specifications

Model	Flow
ECB-AC-3 3	2,30-15 cm³
ECB-AC-3 4	2,30-30 cm³

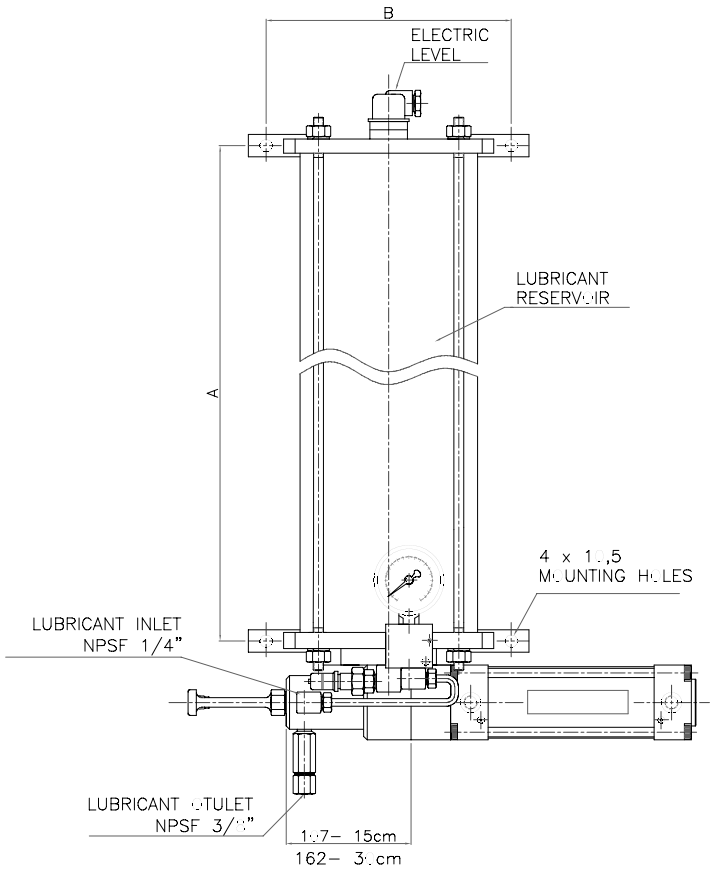

MODEL PUMP	RESERVOIR			
	MODEL	A	B	Kgs / Lts
ECB–AC–3–"X"–TP2[illegible]–X	DCX–TP–2[illegible]	2[illegible]4	165	1,3 / 1,7
ECB–AC–3–"X"–TP3[illegible]–X	DCX–TP–3[illegible]	3[illegible]2		1,[illegible] / 2,5
ECB–AC–3–"X"–TP32–X	DCX–TP–32		21[illegible]	4 / 5,[illegible]
ECB–AC–3–"X"–TP34–X	DCX–TP–34	562		6,5 / [illegible],3

"X"= (3)15cm³ (4)3[illegible]cm³

X = (A)GREASE (B)OIL

Example Order:

Central pumping Station ECB-AC-33-TP28-A

Requirement Code

ECB-AC-3 [ ] - TP [ ] [ ]

Regulable Discharge	
2,30 - 15 cm³	3
2,30 - 30 cm³	4

Dep. Mod.28	28
Dep. Mod.30	30
Dep. Mod.32	32
Dep. Mod.34	34

Lubricant	
Grasa	A
Aceite	B

Electric Pump
BCE-JR

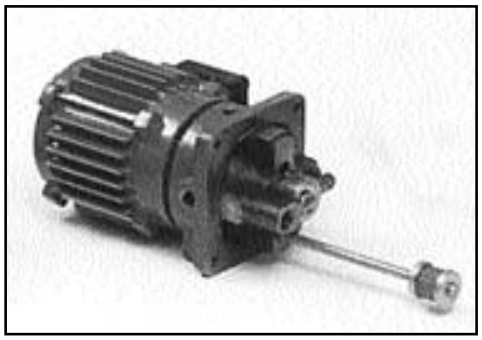

Description

A motorised radial piston pump. Suitable for operating with oil and used in single line progressive and single line parallel lubrication systems.
This pump can be combined with different types of lubricant reservoirs and used in the machine tool and other related industries requiring oil lubrication.
The robust construction and quality assembly components of this unit makes it a highly reliable pump.

Specifications

Material	Steel
Flow	100 cm^3/min.
Max. Operation Pressure	50 bar
Motor working	0,08 Kw. - 2800 r.p.m. 220/380V. - 50 Hz.
Lubricant	mineral and sinthetic base oil

Observation: according to the type of deposit to use this unit is identified with 2 models:: for deposits of 3 liters of capacity=BCE-JR-3. For deposit of 15 liters of capacity=BCE-JR-15. The only existent difference among these two models is the height of its suction tube.

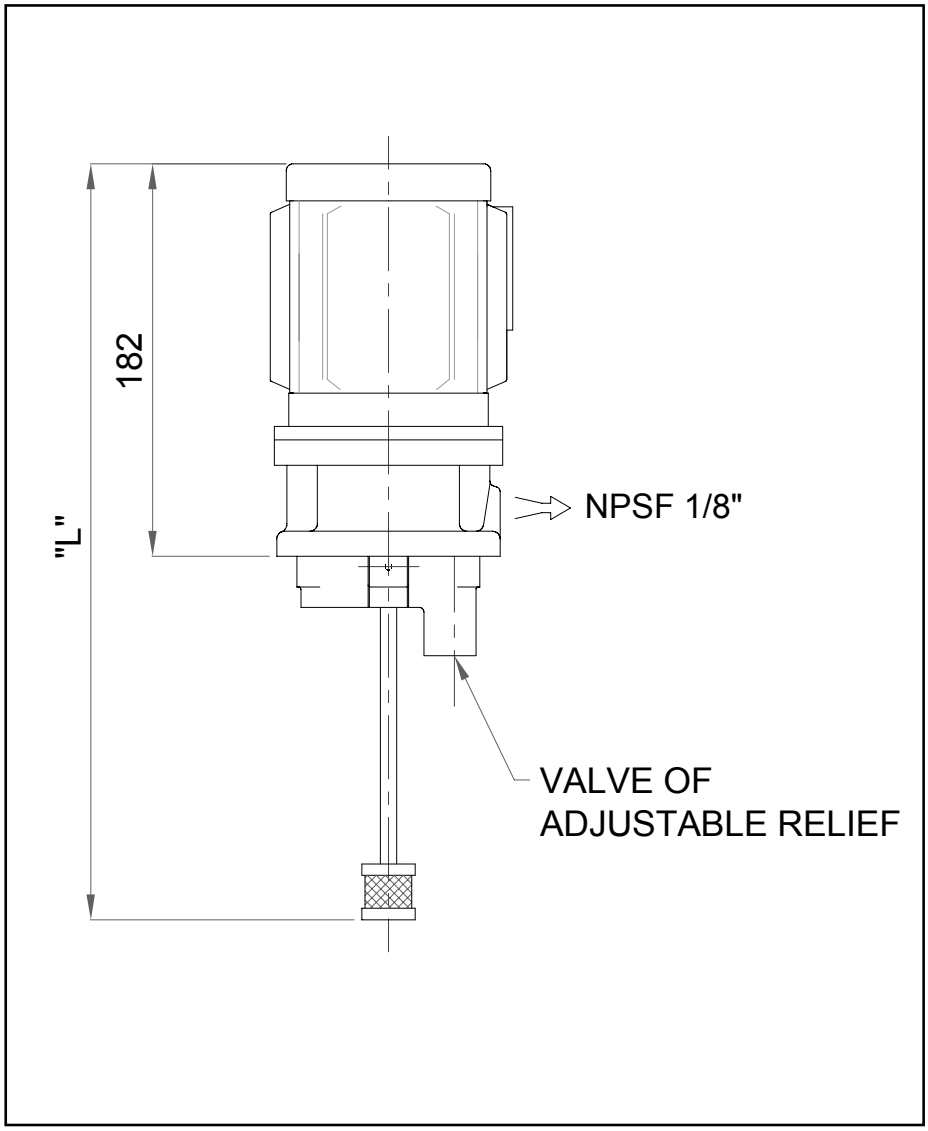

Pump Model	Depósit	
	Capac.	"L"
BCE-JR-3	3 Lts.	313
BCE-JR-15	15 Lts.	470

Requirement Code

BCE-JR □

Deposit Size	
3 Litros	3
15 Litros	15

Example Order: BCE-JR-3

Electric Pump BCE-JE

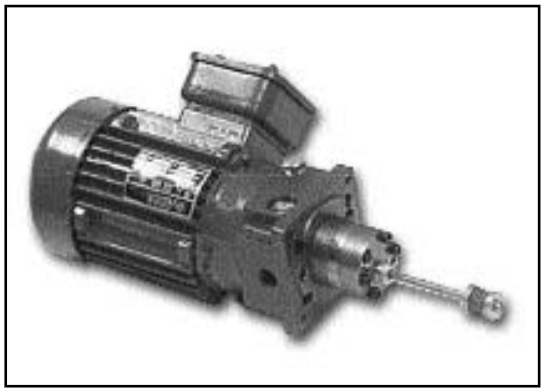

Description

A motorised gear pump. Suitable for operating with oil and used in single line progressive and single line parallel lubrication systems.
This pump can be combined with different types of lubricant reservoirs and used in the machine tool and other related industries requiring oil lubrication.
The robust construction and quality assembly components of this unit makes it a highly reliable pump.

Specifications

Material	Steel
Flow	500 cm³/min. / 750 cm³/min.
Max. Operation Pressure	50 bar
Motor Working	1/8 Kw - 2800 r.p.m. 220/380V. - 50 Hz.
Lubricant	mineral and sinthetic base oil

OBSERVATION: according to the depost type to use this unit is identified with 2 models: for deposits 3 liters of capacity=BCE-JE-3. For I deposit of 15 liters of capacity=BCE-JE-15. The only existent difference among these two models is the height of its suction tube.

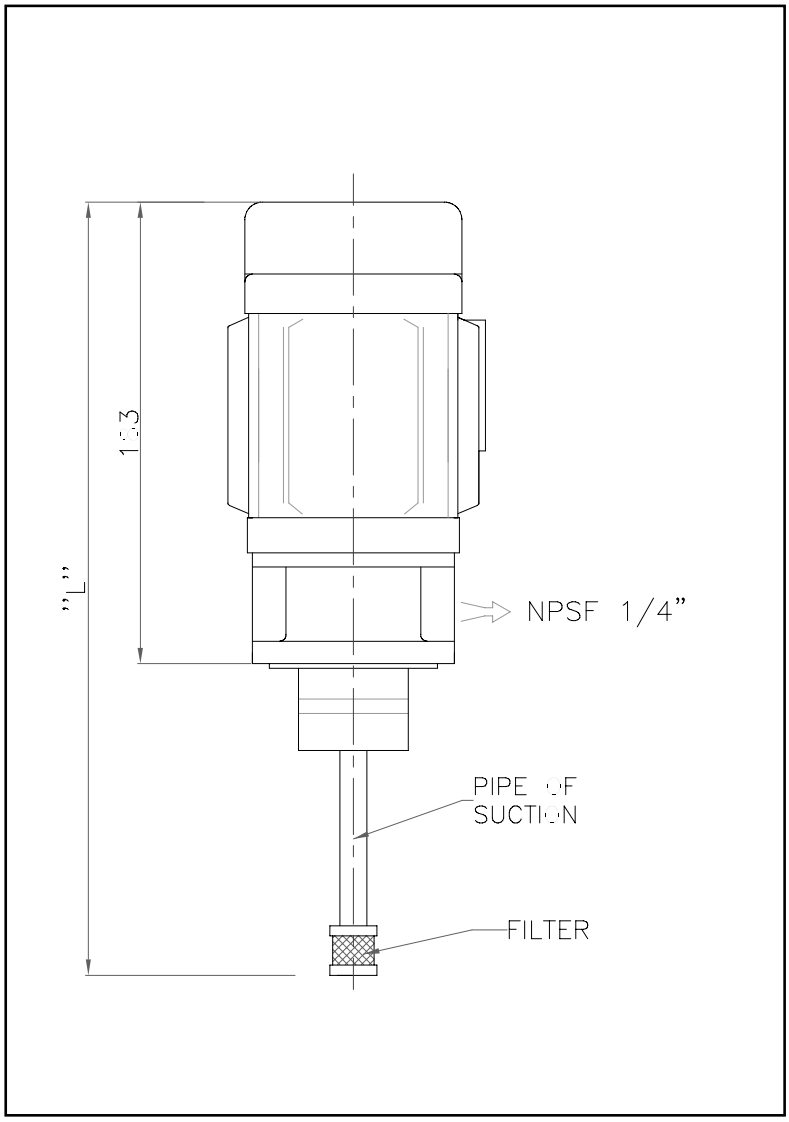

Pump model	Depósit	
	Capac.	"L"
BCE-JE-XXX-3	3 Lts.	333
BCE-JE-XXX-15	15 Lts.	438

Requirement Code

BCE-JE [ ] [ ]

Flow	
500 cm³/min.	500
750 cm³/min.	750

Deposit Size	
3 Litros	3
15 Litros	15

Example order: BC-JE-500-3

Central pumping Station
ECB-JE/JR-3

Description

These central pumping stations are designed to operate in centralized single progressive and single line parallel lubrication systems.
Assembled on a transparant polycarbon reservoir with filler breather and low level switch. These central pumping stations can be provided with BCE-JR or BCEJE pumps depending on the size of the lubrication system.

Specifications

Pumping Unit

Mod. Pump	Type	Flow	Max. Pressure
BCE-JR	PISTON	100 cm³/min	50 bar
BCE-JE 500	GEARS	500 cm³/min	50 bar
BCE-JE 750	GEARS	750 cm³/min	50 bar

Depósit	
Material	Policarbonato REVEALE
Capacity	3 Litros
low level indicator Lubricant Charge entrance	

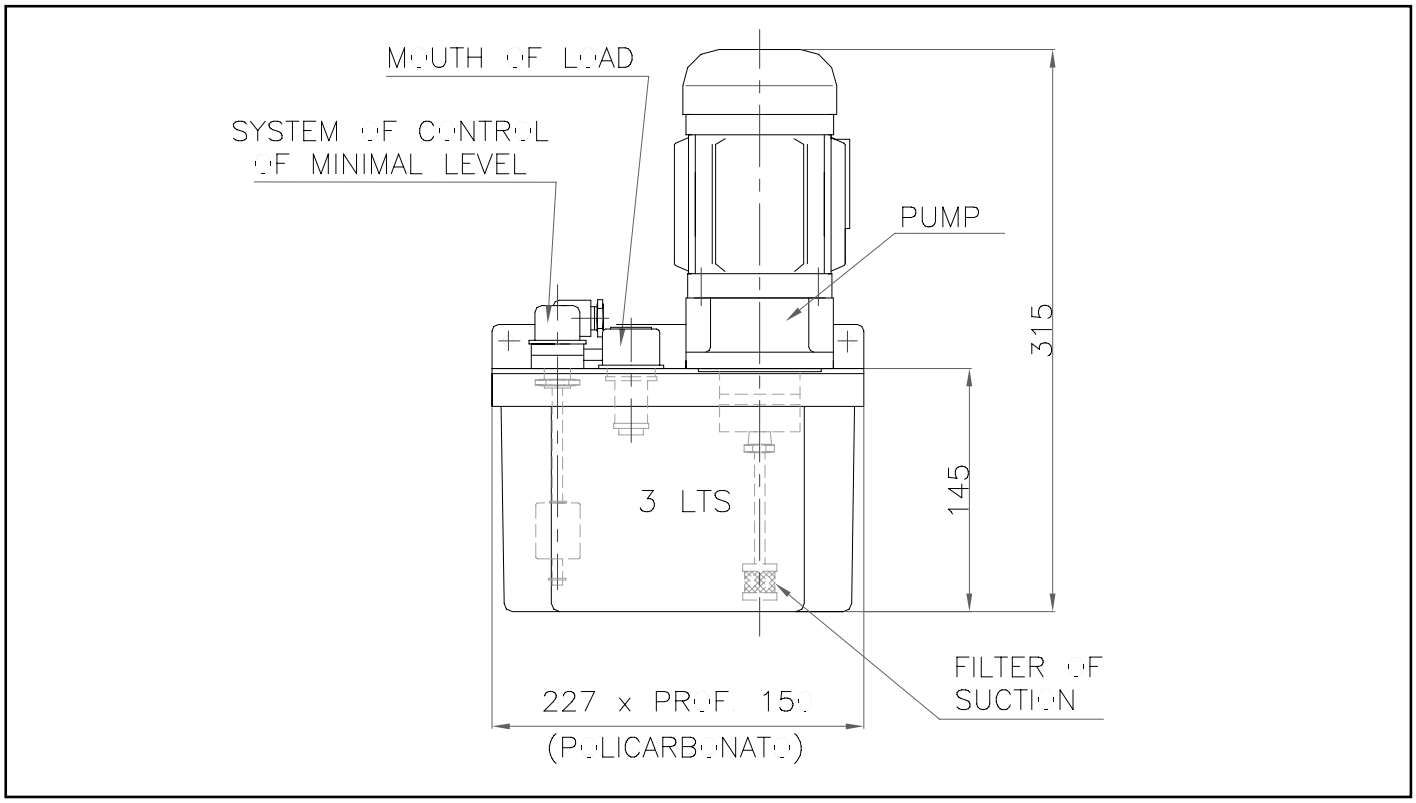

Example order: ECB-JE-3-500

Central pumping stations BCE-JE with polycarbon reservoir 3 liters capacity, and with 500 cm3/min pump.

Requirement Code

ECB [ ] - 3 - [ ]

Bomb Type	
BCE-JR	JR
BCE-JE 500	JE
BCE-JE 750	JE

Pump flow	
BCE-JR 100 cm³/m	100
BCE-JE 500 cm³/m	500
BCE-JE 750 cm³/m	750

Central Pumping Station
ECB-JE/JR-15/25

Description

Pumping Station with various pumps fitted to a common reservoir operating simultaneously.
These central pumping stations can operate in Unique Line or Single line Progressive systems;
Pumps could be BCE-JR or BCE-JE.
The steel reservoir is normally with low level electric, filler / breather and visual level indicator.. The solid and robust construction makes it a reliable assembly capable of operating in any indstrial type of applications.

Specifications

Pumping units

Mod. pump	Operation	Flow	Max.Pressure
BCE-JR	Piston	100 cm³/min	50 bar
BCE-JE 500	Gears	500 cm³/min	50 bar
BCE-JE 750	Gears	750 cm³/min	50 bar

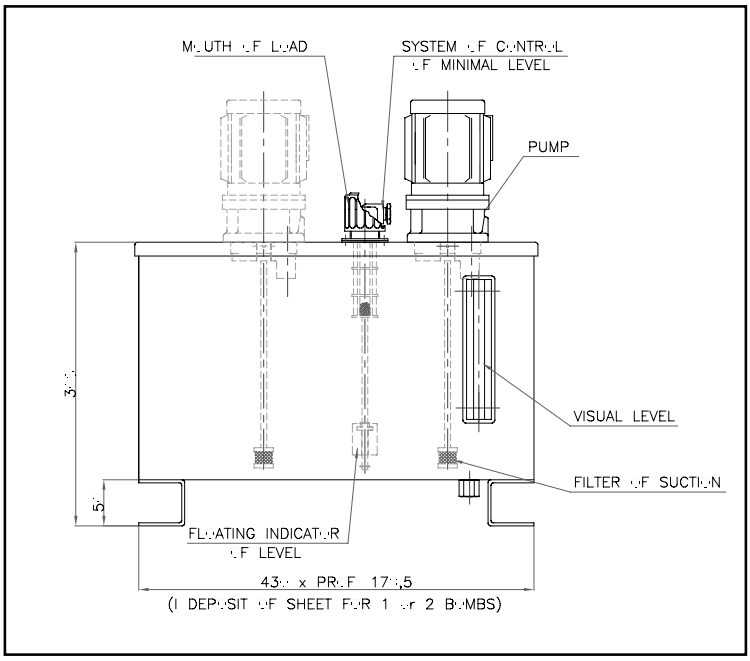

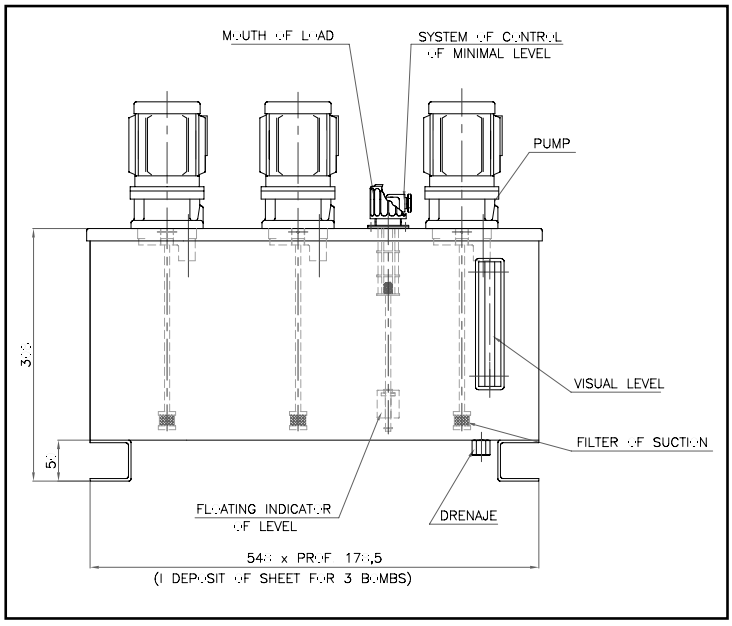

Requirement Code

ECB [ ]

Bomb Type	
BCE-JR	JR
BCE-JE	JE

Bomb Flow	
BCE-JR 100 cm³/m	100
BCE-JE 500 cm³/m	500
BCE-JE 750 cm³/m	750

Deposit Capacity	
15 Litres	15
25 Litres	25

Bomb Quantity	
1 pump	1
2 pumps	2
3 pumps	3

Example Order: ECB-JE-500-25-3

Central Pumping Station consisting of a BCE-JE with 25 liters ty reservoir, pump discharge 500 cm3/min and 3 pumps assembled on the reservoir.

Central Pumping Station
ECB-JE-LS

General dimensions of Pumping Centrals with policarbonate deposit

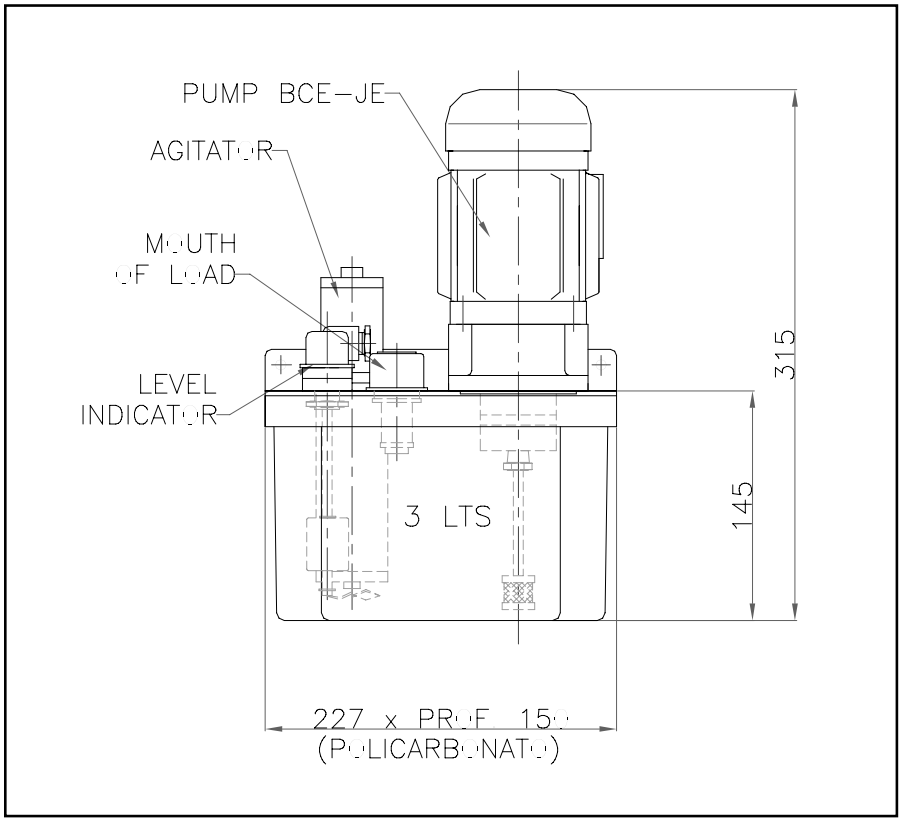

Description

A Central Pumping Station designed to operate in unique centralized lubrication systems using lubricants that needs agitation.
Mounted on a transparent polycarbonate or a steel reservoir with filler / breather and low level switch.
These sets are provided with a special agitator when it is used with oils that contains preservatives in suspension.

Specificacions

Pumping Units

Mod.Pump	Type	Flow	Máx.Pressure
BCE-JE 500	Gears	500 cm³/min	50 bar
BCE-JE 750	Gears	750 cm³/min	50 bar

General Dimensions of Pumping Centrals with metallic deposit

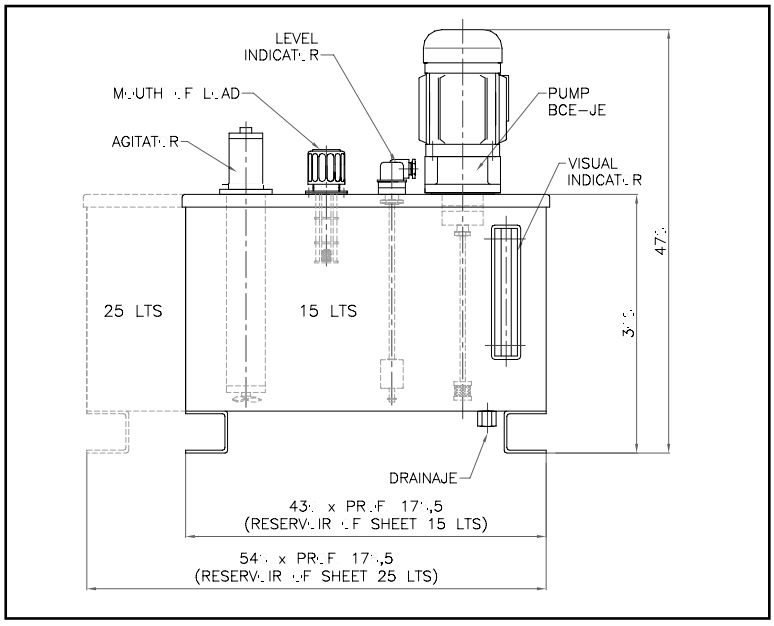

Requirement Code

ECB [ ] [ ] [ ]

Pump Type	
BCE-JE	JE

Pump Flow	
BCE-JE 500 cm³/m	500
BCE-JE 750 cm³/m	750

Deposit Capacity	
15 Litros	15
25 Litros	25
3 Litros	3

Unique Line

Progressive Line

Central Pumping Station
ECB-EM

Description

These Central Pumping Stations are designed to operate with grease or oil in single line progressive and dualine systems.
Driven by a 12 or 24 volts DC electric motor these pumps can be fitted with 1 to 3 pumping elements.The pumping elements are operated by an eccentric.
Acrylic reservoirs for oil or grease with different capacities can be assembled on the pump unit to satisfy the lubricant consuption demands. These reservoirs can also be fitted with low level electric switches designed to operate with oil or grease. These pumps are suitable for installation on mobile machinery.

Specifications

Material body	CAST ALUMINIUM		
Pumping elements	OF 1 TO 3		
Max. operation Pressure	250 bar		
Fixed Flow Derby	5 - 5,72 cm³/min. 6 - 8,00 cm³/min. 7 - 11,44 cm³/min.	Control Switchboard	Mod. CC-2000 Mod. CC-2200
Motor	12 ó 24 Volts. - 40 RPM		

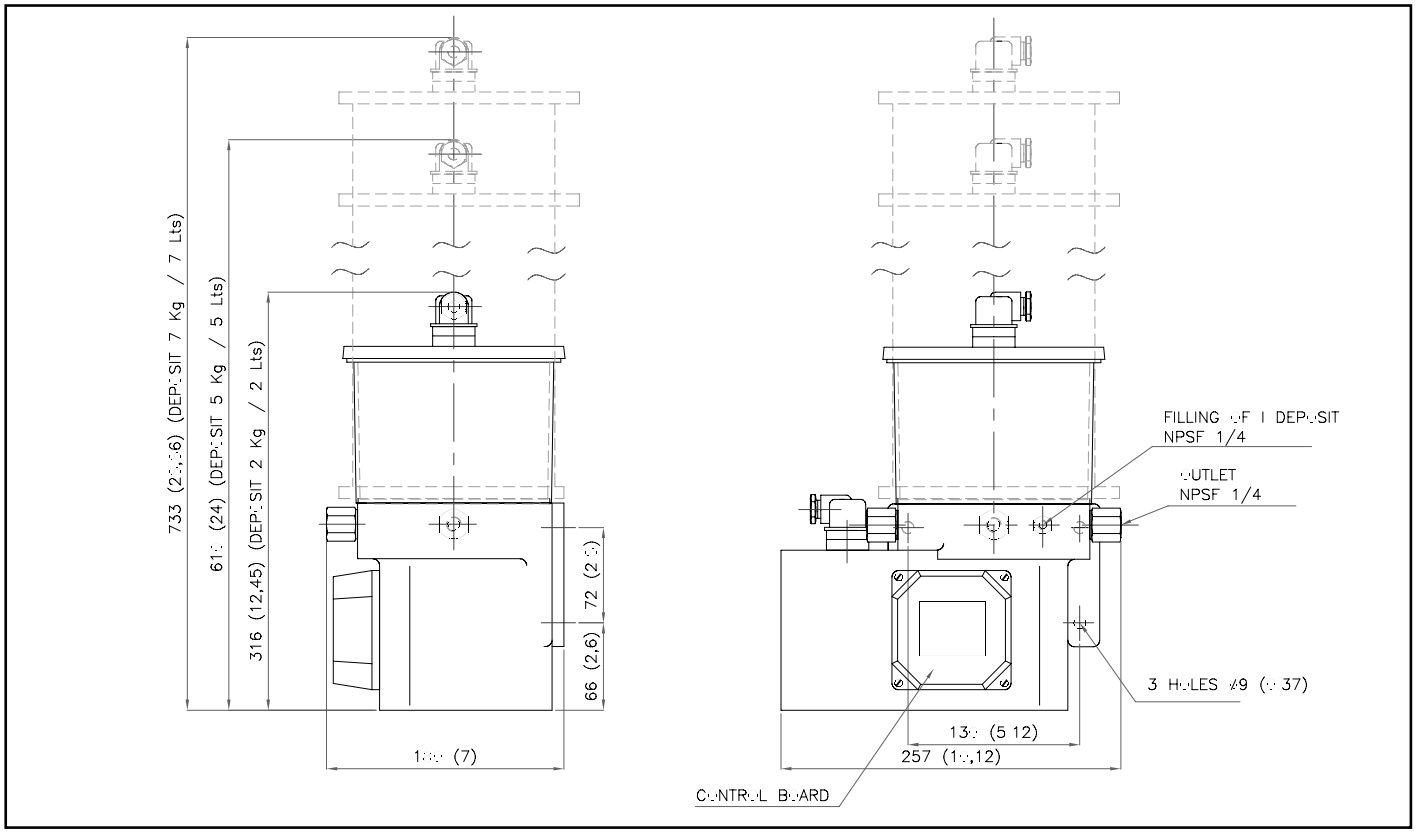

Example :

Ej. 1: ECB-EM-3(6-7-6)7-A-2

ECB-EM with motor work of 24 Volts, 2 bombines of characterisitc 6 and 1 bombín of characteristic 7 and with a 7 Kg. deposit capacity for grease.

Ej. 2: ECB-EM-2(6-5)5-A-2

ECB-EM with motor work of 24 Volts , 1 bombínof characterisitc 6, 1 bombín of characterisitc 5 and with a 5 Kg. deposit capacity for grease.

Part Numbers

ECB-EM [ ] ([- -]) [ ] [ ] [ ]

Cant. Bombines		Caudal Bombines		Capac. Dep. Lubric.		Lubricant	
1 Pumping	1	5,72 cm³/min.	5	2 Kg/2 Lts.	2	Grease	A
2 Pumping	2	8,00 cm³/min.	6	5 Kg/5 Lts.	5	Oil	B
3 Pumping	3	11,44 cm³/min.	7	7 Kg/7 Lts.	7		

12 Vcc	1
24 Vcc	2

Requirement Code reparation STD kit

EM-3130-R

060228

Double Line

Progressive Line

Central Pumping Station
ECB-EF

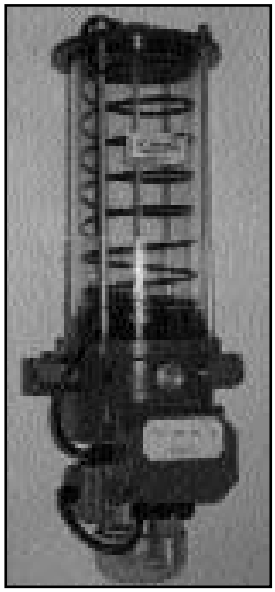

Description

These Central Pumping Stations are designed to operate with grease or oil in single line progressive and dualine systems.
Driven by an AC electric motor these pumps can be fitted with 1 to 3 pumping elements.The pumping elements are operated by an eccentric.
Acrylic reservoirs for oil or grease with different capacities can be assembled on the pump unit to satisfy the lubricant consuption demands. These reservoirs can also be fitted with low level electric switches designed to operate with oil or grease. These pumps are suitable for installation on mobile machinery.

Specifications

Body Material	CAST ALUMINIUM		
Pumping Elements	OF 1 TO 3		
Max. Operation pressure	250 bar		
Fixed Flow Derby	5 - 2,00 cm³/min. 6 - 2,80 cm³/min. 7 - 4,00cm³/min.	Control Switchboard	Mod. CC-3000-F
Motor	0.07 Kw. - 220/380V - 1400 RPM - 50 Hz.		
Reducer	1:100		

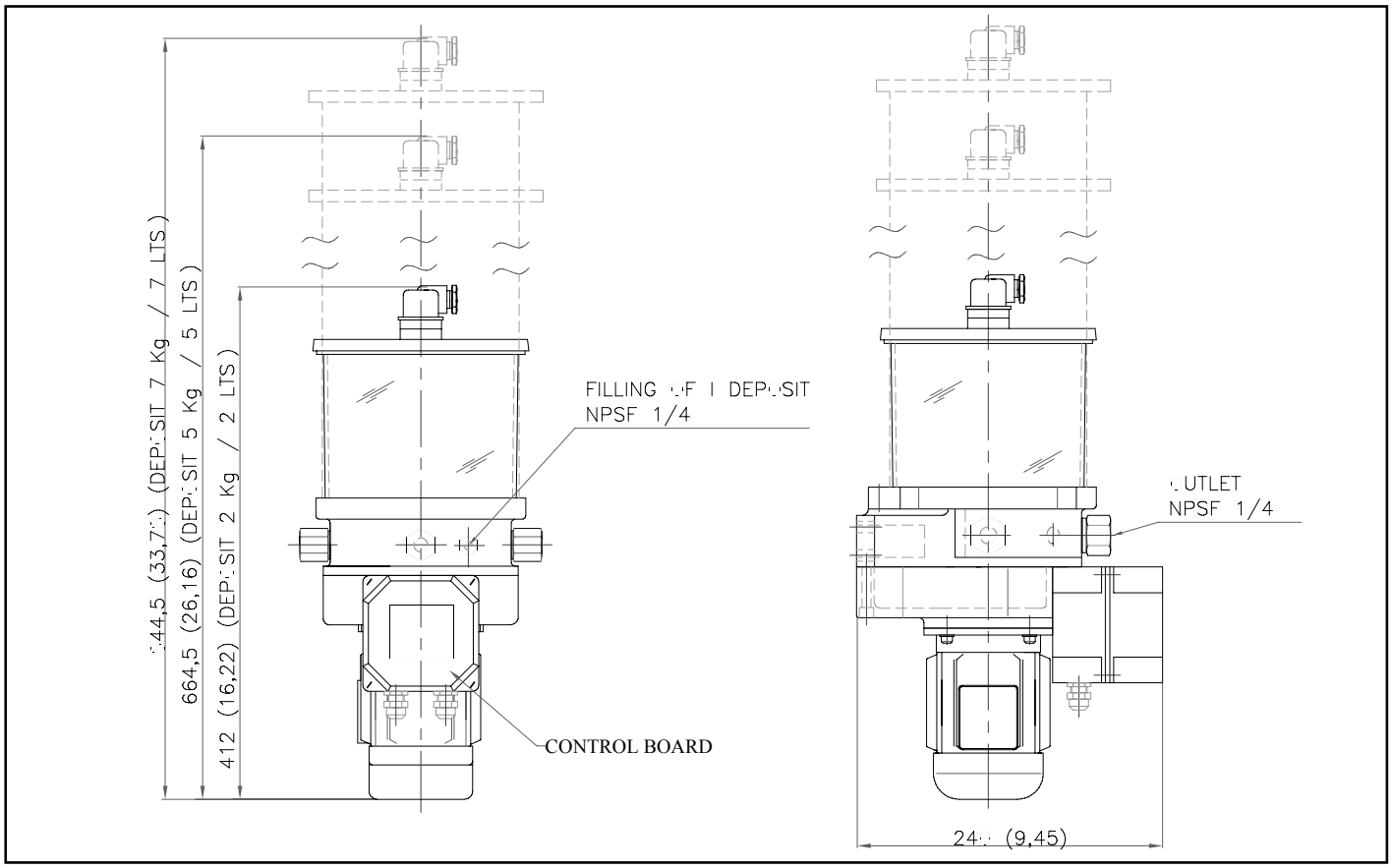

Example:

Ej.1: ECB-EF-3(7-6-7)7-A

E.g. 1: ECB-EF-3(7-6-7)7A ECB-EF is a central pumping station with motor of working of 220 V, with 2 derbies of characteristic 7 and 1 derby of characteristic 6 and a deposit of 7 kg of grease capacity.

Ej.2: ECB-EF-1(6)5-A

E.g. 2: ECB-EF-1(6)5-TO
ECB-EF is a central pumping station with motor of working of 220 V, with 1 derby of characteristic 6 and a deposit of 5 kg. of grease capacity.

Part Numbers

ECB-EF [ ] ([- -]) [ ] [ ]

Cant. Bombines	
1 Pumping	1
2 Pumping	2
3 Pumping	3

Caudal Bombines	
5 - 2,00 cm³/min.	5
6 - 2,80 cm³/min.	6
7 - 4,00 cm³/min.	7

Capac. Dep. Lubric.	
2 Kg/2 Lts.	2
5 Kg/5 Lts.	5
7 Kg/7 Lts.	7

Lubricant	
Grease	A
Oil	B

Requirement Code reparation STD kit

EF-3530-R

060228

Pumping element
EBC-VA

Description

EBC-VA pumping element is the pumping elements used in ECB-EM and ECB-EF pumping stations. They are provided internally with a relief valve that prevents damage to the pump in case of system blockage.

Specifications

Lubricant	Oil or Grease up to NLGI2 grade
Discharge	de 0,143 a 0,286 cm^3
Max.Pressure	250 bar
Relief Pressure	from 110 to 250 bar

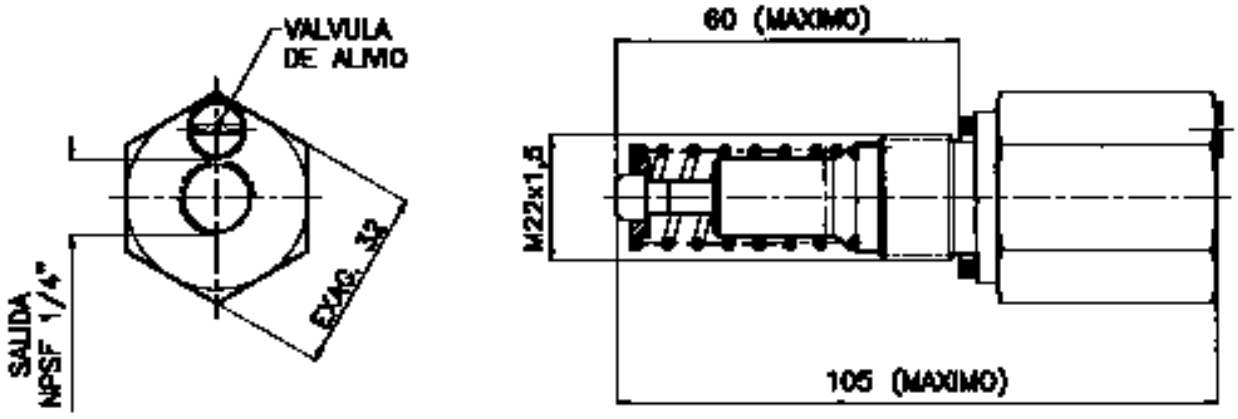

Requirement Code

Dosage

EBC-VA [ ] [ ]

Discharge	
0,143 cm^3	5
0,200 cm^3	6
0,286 cm^3	7

Relief	
110 bar	1
250 bar	2

Pneumatic pump
Mod. BCN-219/221

Description

Air operated drum pumps. 4:1 Ratio for oil and 50:1 Ratio for grease. These pumps can be assembled to suit different types of lubricant containers.Pumps are mounted with drum covers for grease and bung adaptors for oil.
The air motors are corrosion resistant with double trigger mechanism, and uses a high quality packing assembly to prevent lubricant entering the air motor. The pumping mechanism is manufactured from special material ensuring long life.

Specificacions

Lubricant	GREASE “A”	OIL “B”
Flow / cycle	4,4 g/ciclo	31 cm^3/ciclo
Flow / min.	1,2 Kg./min.	6,5 lts./min.
Pressure Relationship	50:1	4:1
Air operation pressure	Máx: 12 bar - Mín: 2 bar	

PUMP MODEL	D	E
BCN-219-A	419	746
BCN-220-A	590	907
BCN-221-A	872	1171
BCN-225-A	549	876
BCN-219-B	391	680
BCN-220-B	693	982.5
BCN-221-B	921	1210.5
BCN-225-B	598	887.5

Prefix (A): Grease
Prefix(B): Oil

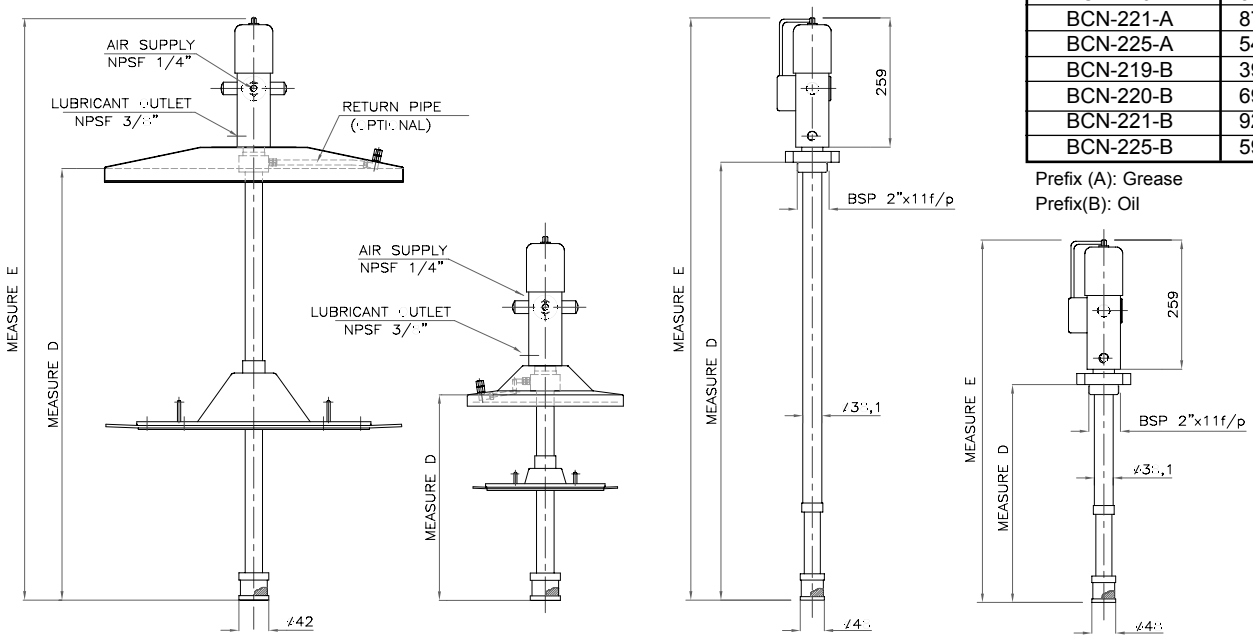

BCN-221-A
Grease Pump

BCN-219-A
BCN-220-A
BCN-225-A

BCN-221-B
Oil Pump

BCN-219-B
BCN-220-B
BCN-225-B

Example Order:

1) BCN-220-A-TP
Pump with lid p/grease (can 60 Kg.)

Requirement code for reparation STD kit

PUMP MODEL	KITCODE
BCN-219-A	219-249
BCN-220-A	220-249
BCN-221-A	221-249
BCN-225-A	225-249
BCN-219-B	219-251
BCN-220-B	220-251
BCN-221-B	221-251
BCN-225-B	225-251

Requirement code

BCN-2 [ ]

Can 20 Kg.	19
Can 60 Kg.	20
Tambor 180 Kg.	21
Can 25 Kg.	25

[ ]

Lubricant	
Grease	A
Oil	B

[ ]

Accesories	
D/C and F/P	TP
Bung Adaptor	N

Pneumatic Pump
Model BCN 85

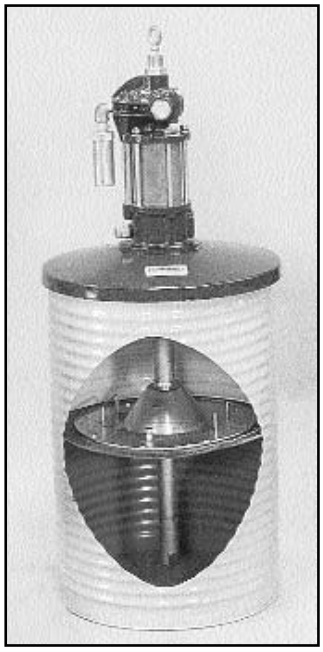

Description

Air operated drum pumps. 6:1 Ratio for oil and 40:1 / 75:1 Ratio for grease. These pumps can be assembled to suit different types of lubricant containers. Pumps are mounted with drum covers for grease and bung adaptors for oil. The air motors are corrosion resistant with double trigger mechanism, and uses a high quality packing assembly to prevent lubricant entering the air motor. The pumping mechanism is manufactured from special material ensuring long life.

Specificacions

Lubricant	GREASE "A"		OIL "B"
Flow / cycle	22,3 g/ciclo	22,3 g/ciclo	140 cm³/ciclo
Flow/ min.	9 kg./min.	5,7 kg./min.	20 lts./min.
Pressure Relationship	40:1	75:1	6:1
Air operation pressure	Máx: 12 bar - Mín: 2 bar		

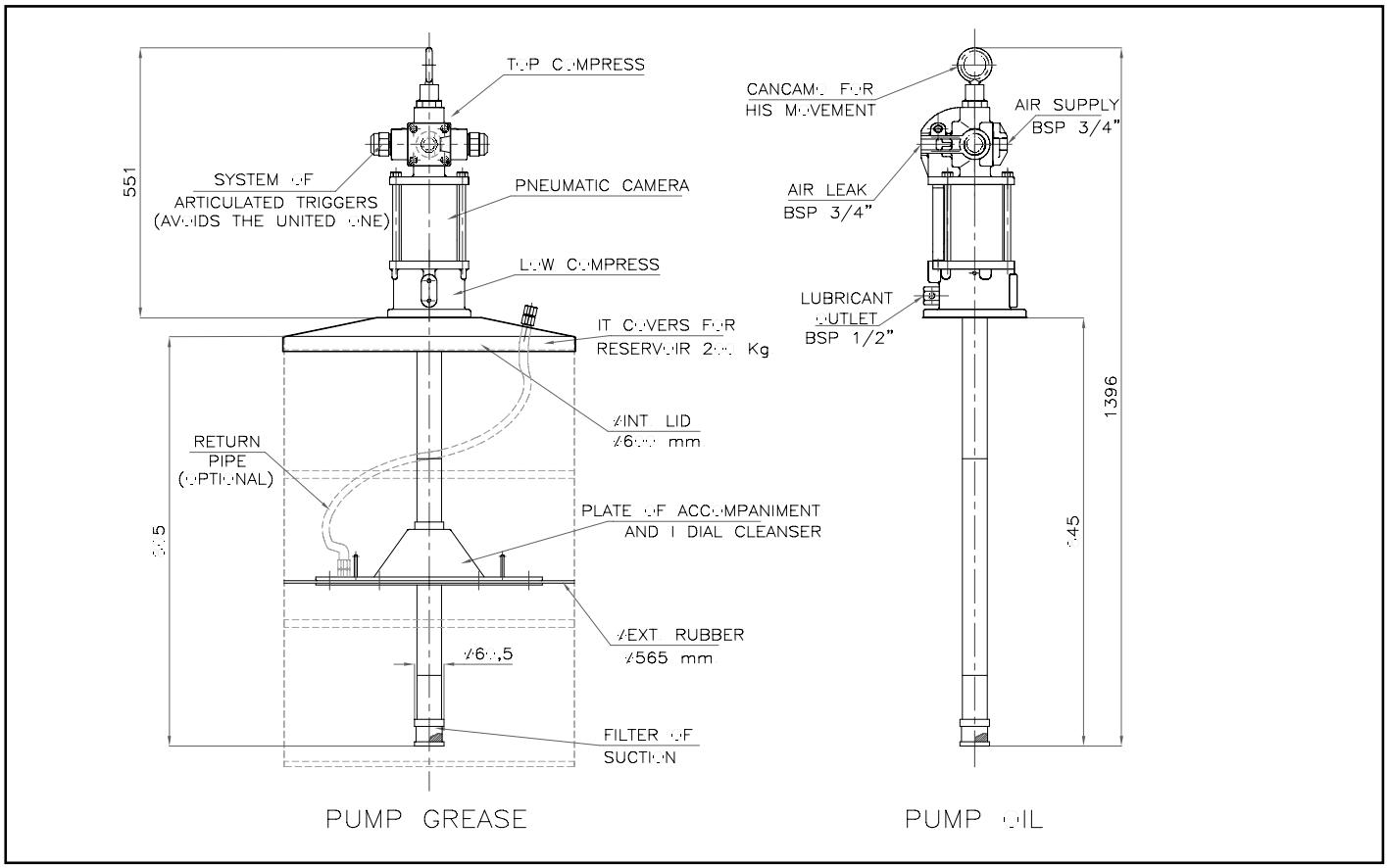

Order example:

1) BCN-85-A-TP
PUMP FOR FAT WITH LID AND PLATE

Requirement Code of reparation STD kit

PUMP MODEL-	CODIGO KIT
BCN-85-A	13BCN-85-K
BCN-85-B	13BCN-85-B-K
BCN-86-A	13BCN-86-K

Requirement Code

BCN [ ] [ ]

Model Pump	
Rel. 40:1 Grease	85-A
Rel. 6:1 Aceite	85-B
Rel. 75:1 Grasa	86-A

Accesories	
D/C and F/P	TP
Bung Adaptor	N

Pneumatic Pump Booster

Description

This pump is designed to boost the pressure when the lubricant is pumped over long distances. The booster pump is pipe mounted and driven by the BCN-85 air motor. By regulating the air pressue the booster pumps increases the incoming pressure of the lubricant to the required pressure downstream of the pump. The pumping distance of the lubricant from the storage tank, the storage tank head, the size of the transfer line and the type off lubricant used determines the numberbooster pumps in a system.

Specificationes

Maximun Delivery	Packing	inlet and outlet
3,8 Lts/ min.	Poliuretane	3” NPTF

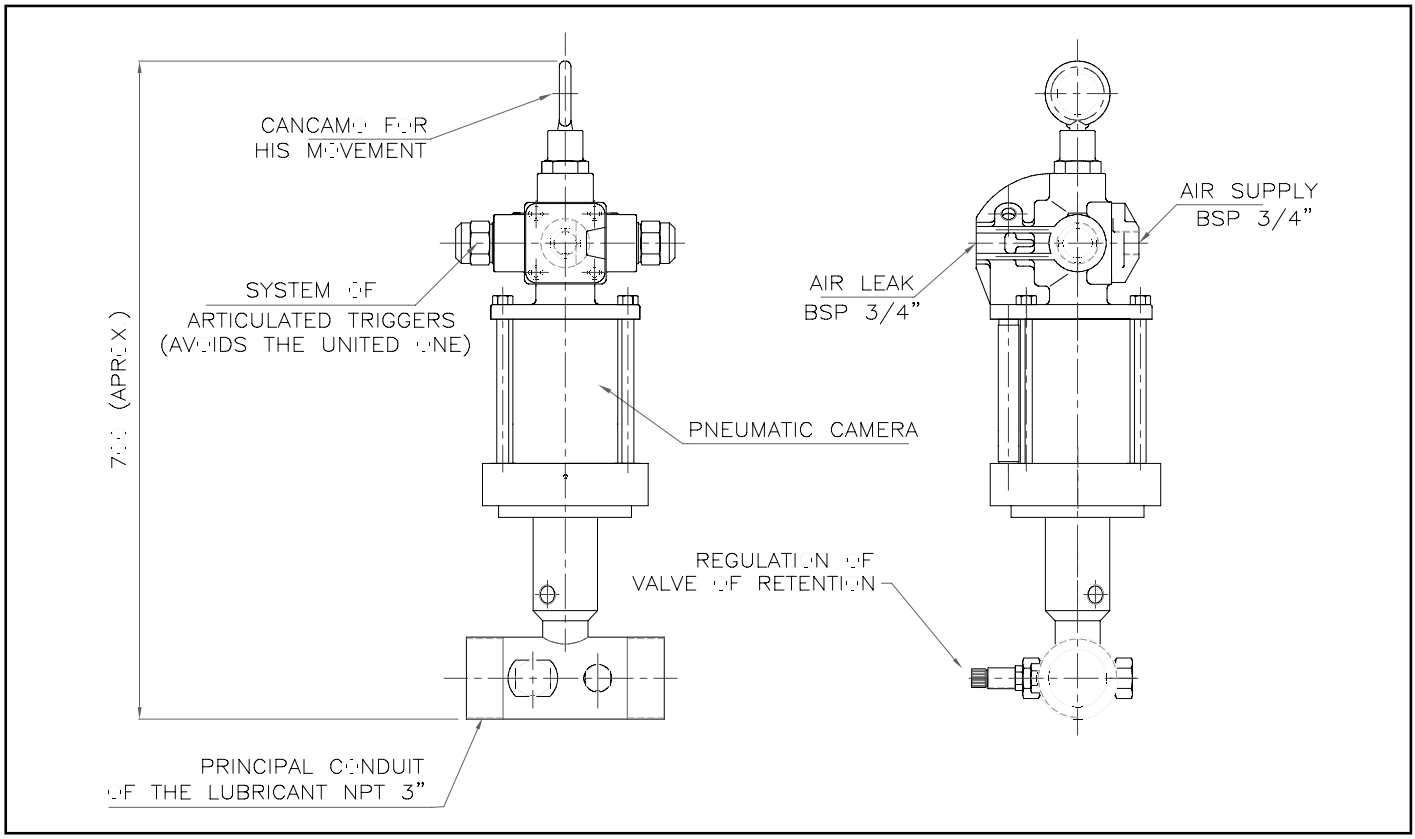

Requirement Code

BCN-R-80

Variable Flow Pump
Mod. BCE CV

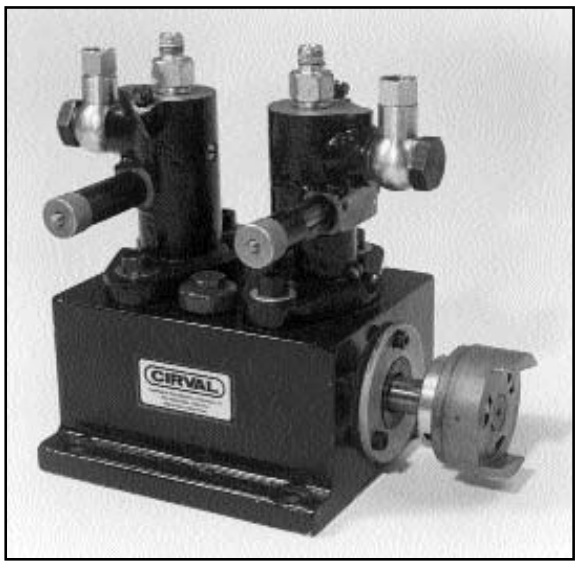

Description

An adjustable positive displacement pumping unit used more specifically in the earth gas industry. Each steel housing can be fitted with up to two pumping units. The pumping units are fitted with a built in relief valve and the flow rates can easily be adjusted to suit.

Specifications

Pump	Max. Flow	Max. revolutions	Max. op. pressure
Model 7	14 litros/hour	980 RPM	560 bar
Model 10	28 litros/hour	980 RPM	560 bar

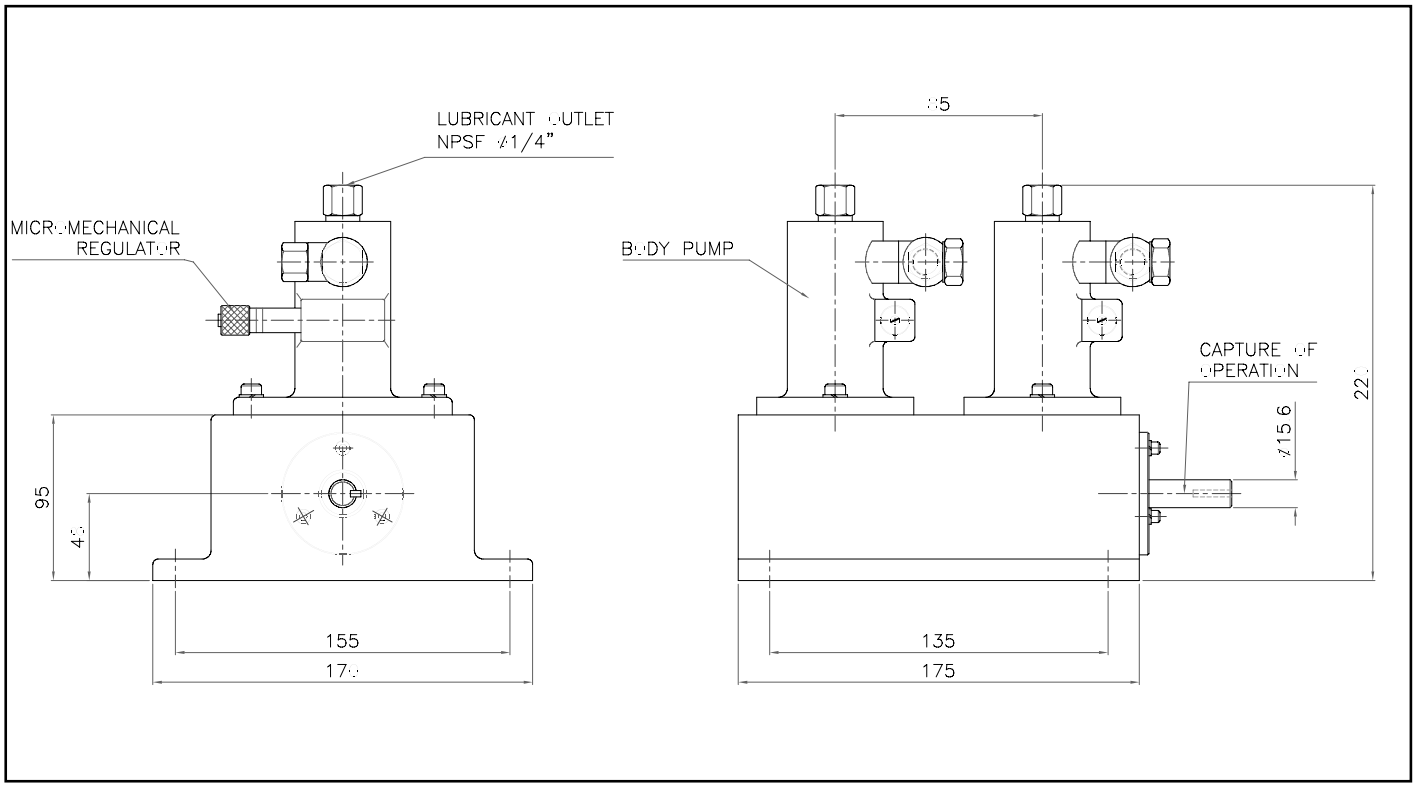

Example Order: Pump Cirval BCE-CV-1-20

Requirement Code

BCE-CV

One pump	1
two pumps	2

Flow	
14 Lts./hour	7
28 Lts./hour	10

LCC lubricator
CABLE Mod. LCC

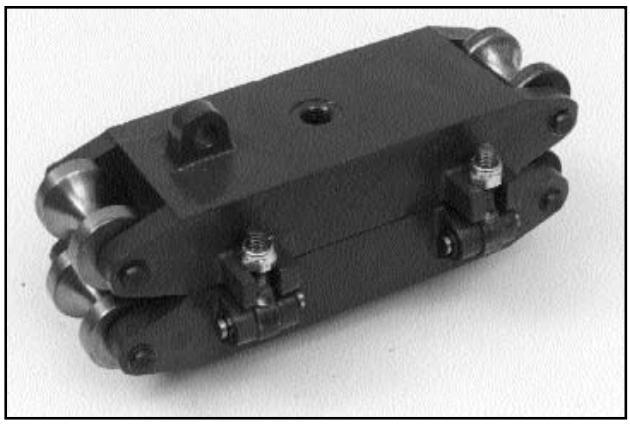

Description

LCC cable lubricator is a temporary installed steel cable lubricator. The design allows the unit to be installed in any position. It is however recommended that the unit be installed next to the pulleys where the cable has little movement.
We reccommend installing the unit for one cycle of the wire rope and then remove. clean and store the unit until lubrication is required again.
Operation: From a motorised, pneumatic or manual pumping station the lubricant is discharged and injected into the cable lubricator.
The cable is lubricated when passing through this lubricator.
Excess of lubricant is removed by a brush with nylon threads maintaining an uniform layer of lubricant.
The cable lubricator, due to its split body allows assembly onto the cable within a few minutes. Securing the equipment is done with flexible supports (chains) or rigid supports (articulate arms) embedded to secured cables.
Typical applications are harbour cranes, winders, bridges, hoist cranes, lifts and many more.

Specifications

Body	Cast Aluminium
Buje guía	Poliuretane
Rodillo guías	Steel with thermic treatmet
Lubricant	Oil or grease

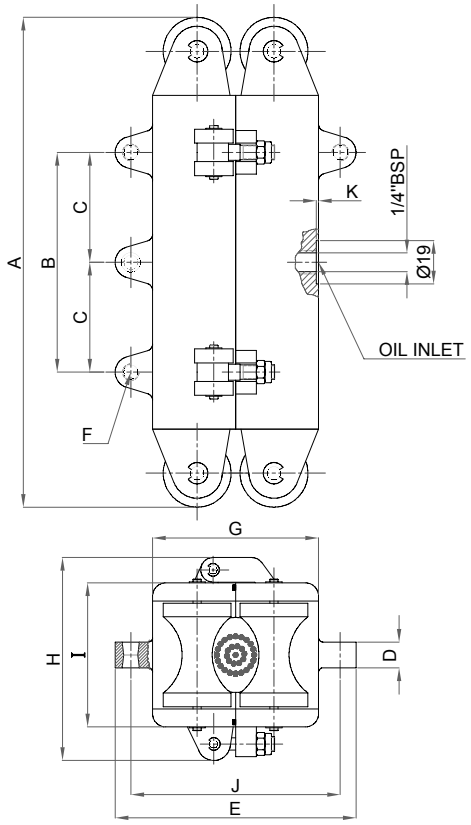

CABLE	A	B	C	D	E	F	G	H	I	J	K
Ø1/2"	220	100	50	10	109	8	72	97	65	92	1
Ø3/4"											
Ø1"											
Ø1 7/8"	425	256	128	19	185	14	130	198	130	156	1

Example order. LCC-3/4"-A

Requirement Code

LCC [ ]

Cable	
Diámetre	1/2"
	3/4"
	1"
	1 7/8"

Lubricant	
Grease	A
Oil	B

Accesories

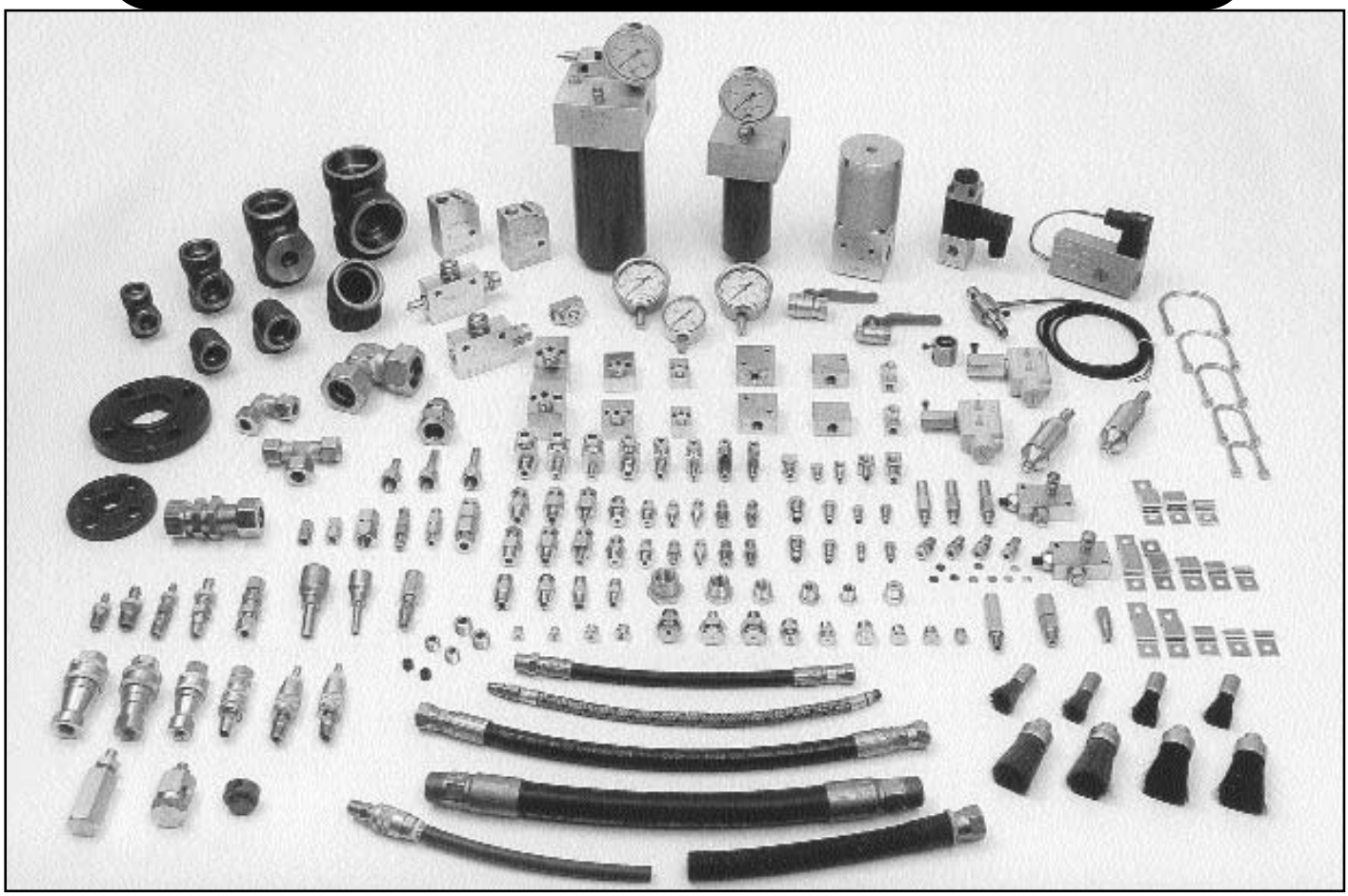

Combination nut and sleeve - CU-81

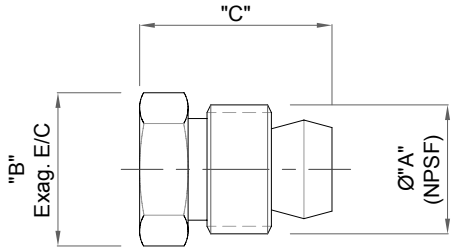

Material: Zinc Coated Steel

MODEL	ø TUBE	øA	B	C
CU-81-AA1	4,8	1/8”	11,1	21,4
CU-81-B1	6,4	1/8”	11,1	19
CU-81-B2	6,4	1/4”	14,3	24
CU-81-D3	9,5	3/8”	17,5	25,4

Straight connector - CU-83

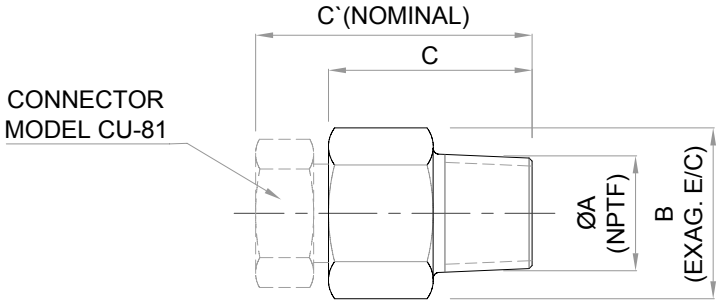

Material: Zinc Coated Steel

MODEL	ø TUBE	øA	B	C	C’
CU-83-A1	4,8	1/8”	12,7	17,5	28
CU-83-A2	4,8	1/4”	14,3	15,5	26
CU-83-B0	6,4	1/16”	12,7	21,4	29
CU-83-B1	6,4	1/8”	12,7	19	28
CU-83-B2	6,4	1/4”	16	19	28
CU-83-B3	6,4	3/8”	19	17,5	28
CU-83-D1	9,5	1/8”	19	28	44
CU-83-D2	9,5	1/4”	19	29	44
CU-83-D3	9,5	3/8”	19	25	40
CU-83-D4	9,5	1/8”	19	58	70

Tube Union - CU-84

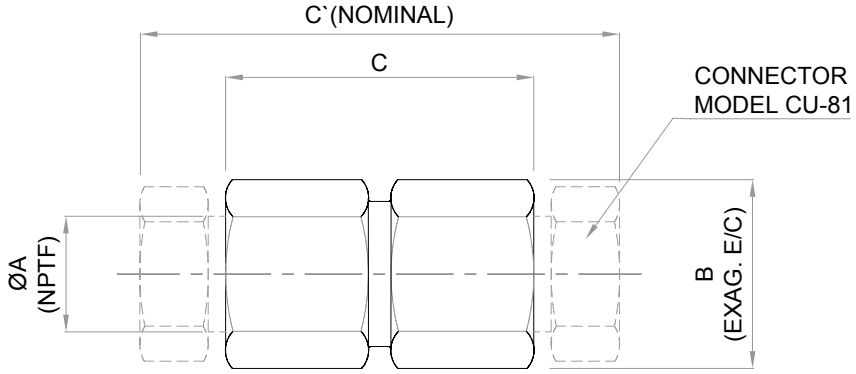

Material: Zinc Coated Steel

MODEL	ø TUBE	øA	B	C	C’
CU-84-A	4,8	1/8”	12,7	25,4	51
CU-84-B	6,4	1/8”	14,3	27	47
CU-84-D	9,5	3/8”	20,6	38,1	67

ELBOW 90º - CU-87

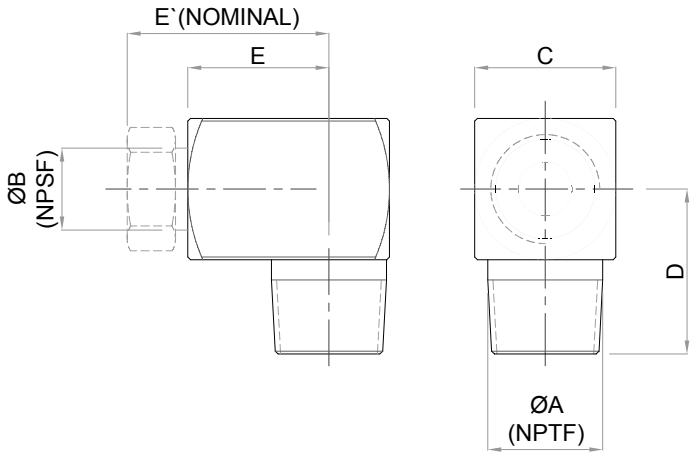

Material: Zinc Coated Steel

MODEL	ø TUBE	øA	øB	C	D	E	E’
CU-87-A1	4,8	1/8”	1/8”	12,7	22	15	25,4
CU-87-A2	4,8	1/4”	1/8”	14	22	15	28,5
CU-87-B1	6,4	1/8”	1/4”	17	22	16	28,5
CU-87-B2	6,4	1/4”	1/4”	17	22	16	28,5
CU-87-B3	6,4	3/8”	1/4”	21	24,5	16	31,8
CU-87-D1	9,5	1/8”	3/8”	21	25	20	36,5
CU-87-D2	9,5	1/4”	3/8”	21	24,5	21	36,5
CU-87-D3	9,5	3/8”	3/8”	21	24,5	21	36,5
CU-87-D4	9,5	1/2”	1/2”	25	30	24	-

STEEL STREET ELBOW 45º - CU-1103

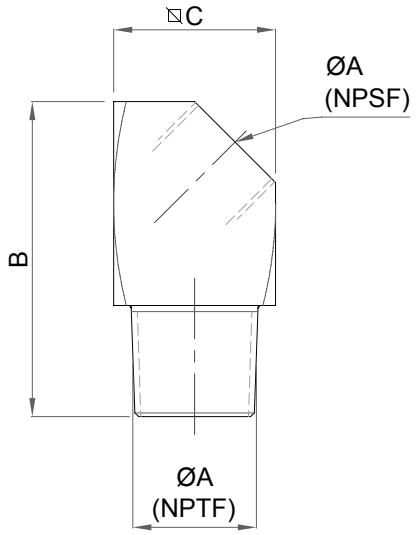

Material: Zinc Coated Steel

MODEL	øA	B	C
CU-1103-A	1/8”	25,4	12,7
CU-1103-B	1/4”	34	17,5

ELBOW 90º - CU-1104

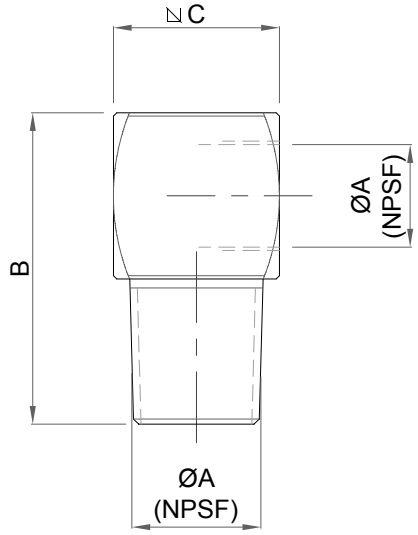

Material: Zinc Coated Steel

MODEL	øA	B	C
CU-1104-A	1/8”	23,8	12,7
CU-1104-B	1/4”	34,5	17,5

STEEL REDUCING STREET ELBOW 90º - CU-1105

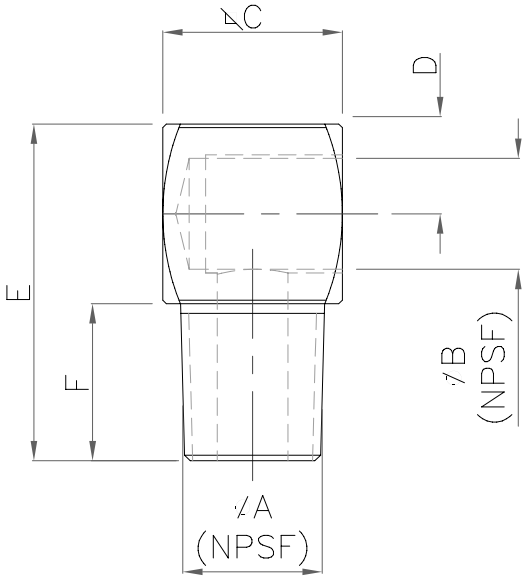

Material: Zinc Coated Steel

MODEL	A	B	C	D	E	F
CU-1105-A	1/8”	1/4”	17,5	8,6	30	12,8
CU-1105-B	1/4”	3/8”	22	11	38	16

REDUCING BUSH- CU-104

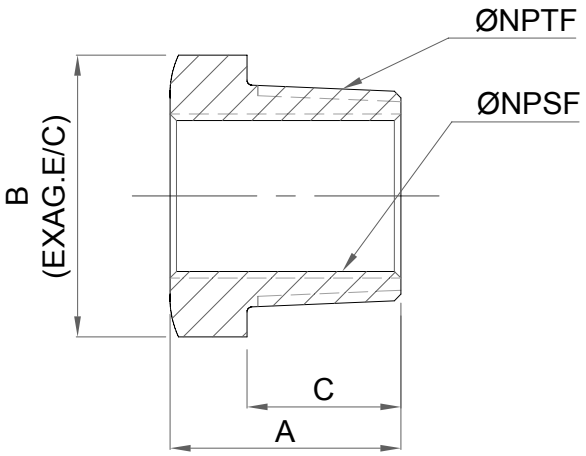

Material: Zinc Coated Steel

MODEL	NPTF	NPSF	A	B	C
CU-104-B1	1/4”	1/8”	16	16	11
CU-104-C1	3/8”	1/8”	16	19	12
CU-104-C2	3/8”	1/4”	18	19	12
CU-104-D1	1/2”	1/8”	18	25	14
CU-104-D2	1/2”	1/4”	20	25	14
CU-104-D3	1/2”	3/8”	20	25	14
CU-104-E1	3/4”	1/8”	20	31	15
CU-104-E2	3/4”	1/4”	22	31	15
CU-104-E3	3/4”	3/8”	22	31	15
CU-104-E4	3/4”	1/2”	22	31	15
CU-104-F2	1”	1/4”	22	38	20
CU-104-F3	1”	3/8”	28	38	20
CU-104-F4	1”	1/2”	28	38	20
CU-104-F5	1”	3/4”	28	38	20
CU-104-H4	1 1/2”	1/2”	30	45	20

PIPE NIPPLES - CU-151

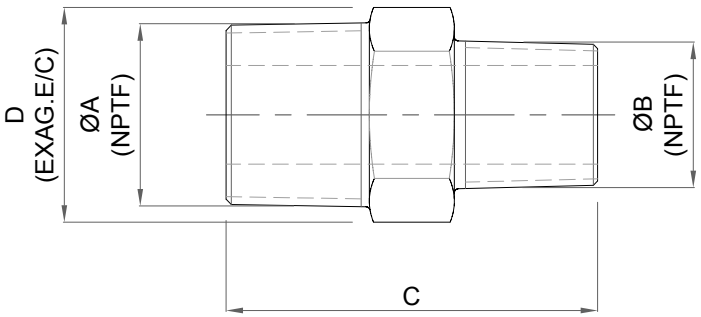

Material: Zinc Coated Steel

MODEL	øA	øB	C	D
CU-151-11	1/8”	1/8”	27	12,7
CU-151-21	1/4”	1/8”	30	14,3
CU-151-22	1/4”	1/4”	35	14,3
CU-151-32	3/8”	1/4”	35	17,5
CU-151-33	3/8”	3/8”	35	17,5

ADAPTOR CU-431

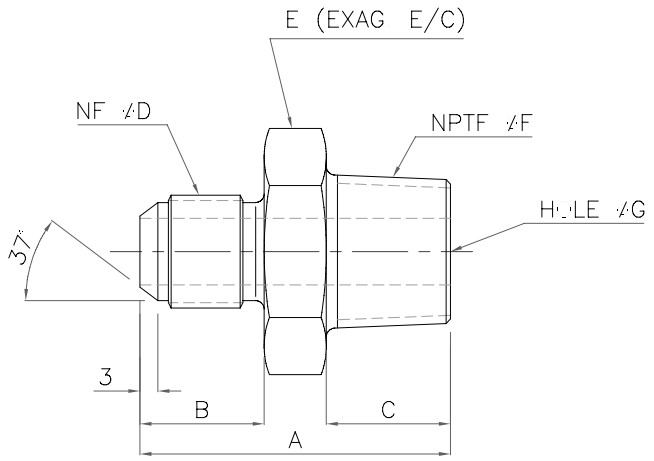

Material: Zinc Coated Steel

MODEL	A	B	C	D	E	F	G
CU-431 2-4	31	14	10	7/16”	12.7	1/8”	4.5
CU-431 4-4	36	14	14	7/16”	14.3	1/4”	4.5
CU-431 6-4	35	14	14	7/16”	24	3/8”	10.5
CU-431 2-5	31	14	10	1/2”	14.3	1/8”	6
CU-431 4-5	36	14	14	1/2”	14.3	1/4”	6
CU-431 4-6	36	14	14	9/16”	16	1/4”	7.5
CU-431 6-5	35	14	14	1/2”	24	3/8”	7.5
CU-431 6-6	36	14	14	9/16”	19	3/8”	7.5
CU-431 8-6	43	14	19	9/16”	22	1/2”	13
CU-431 4-8	39	17	14	3/4”	21	1/4”	7
CU-431 6-8	39	17	14	3/4”	21	3/8”	10
CU-431 8-8	45	17	19	3/4”	22	1/2”	10
CU-431 12-8	47	17	19	3/4”	28.6	3/4”	10
CU-431 8-10	48	19	19	7/8”	24	1/2”	12
CU-431 12-10	49	19	19	7/8”	28.6	3/4”	13
CU-431 8-12	52	22	19	1 1/16”	28.6	1/2”	13
CU-431 12-12	52	22	19	1 1/16”	28.6	3/4”	15.5
CU-431 12-16	53	23	19	1 5/16”	35	3/4”	15.5
CU-431 16-16	58	23	24	1 5/16”	35	1”	21
CU-431 20-20	62	24	25	1 5/8”	43	1 1/4”	32
CU-431 24-24	68	27	25	1 7/8”	51	1 1/2”	38

PLUG - CU-86

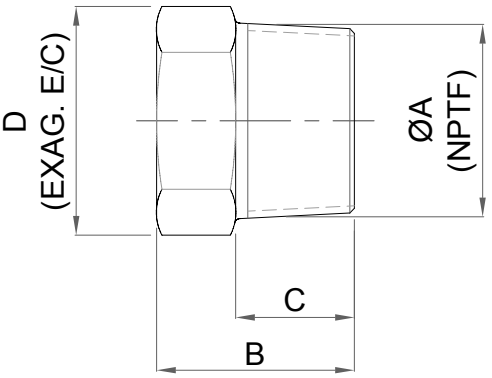

Material: Zinc Coated Steel

MODEL	øA	B	C	D
CU-86-A	1/8”	14,2	9	11,1
CU-86-B	1/4”	14,2	9	14,2
CU-86-C	3/8”	17,5	10,5	17,5
CU-86-D	1/2”	19	11	22,2

PLUG - CU-119

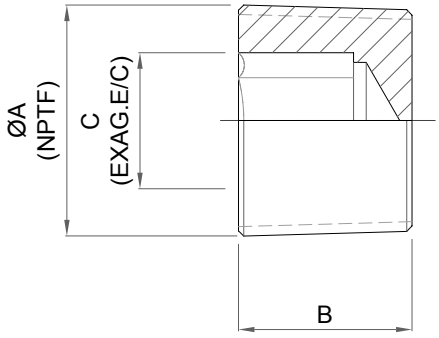

Material: Zinc Coated Steel

MODEL	øA	B	C
CU-119-A1	1/16”	6	4
CU-119-A	1/8”	8	4,8
CU-119-B	1/4”	11,5	6,5
CU-119-C	3/8”	13	8
CU-119-D	1/2”	14,5	9,5
CU-119-E	3/4”	16	14,3

PLUG - CU-2986

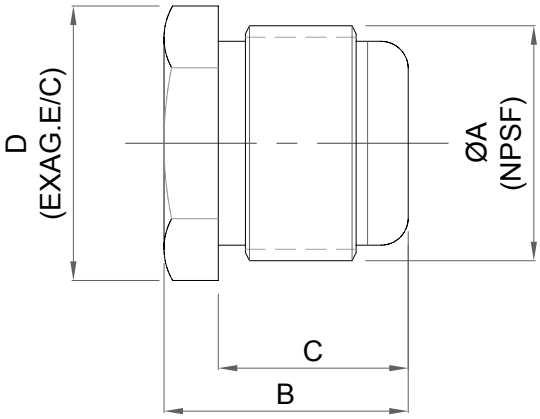

Material: Zinc Coated Steel

MODEL	øA	B	C	D
CU-2986-A	1/8”	15	11	11,1
CU-2986-B	1/4”	17	13	14,3
CU-2986-D	3/8”	18	14	17,5

Anchor Block - CU-1927

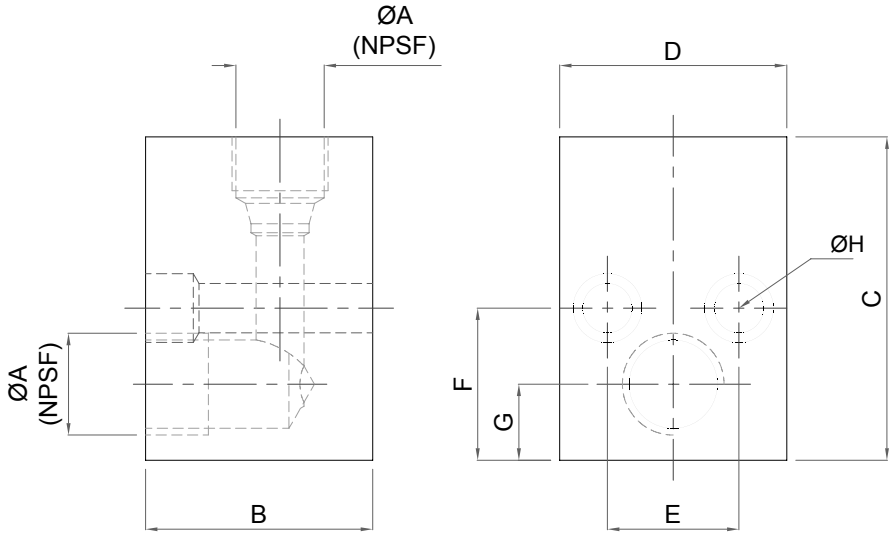

Material: Zinc Coated Steel

MODEL	øA	B	C	D	E	F	G	H
CU-1927-A	1/8”	16	35	22	12	19	8	6
CU-1927-B	1/4”	20	44,5	35	17,5	22	9,5	7
CU-1927-C	3/8”	32	54	38	22	25,4	12,7	8,5
CU-1927-D	1/2”	38	54	38	22	31	13	8,5

Air Bleed - PC

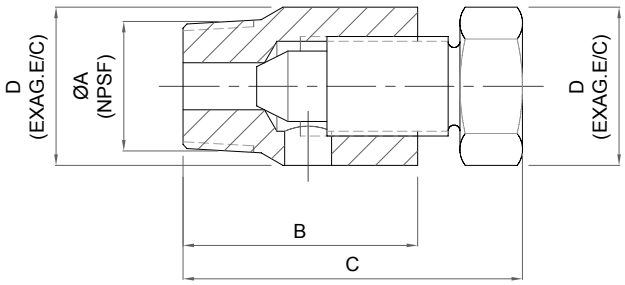

Material: Brass

MODEL	øA	B	C	øD	øD
PC 1	1/8”	14,5	18	14	12,7
PC 3	3/8”	30	42	16	17,1

TEE - CU-137

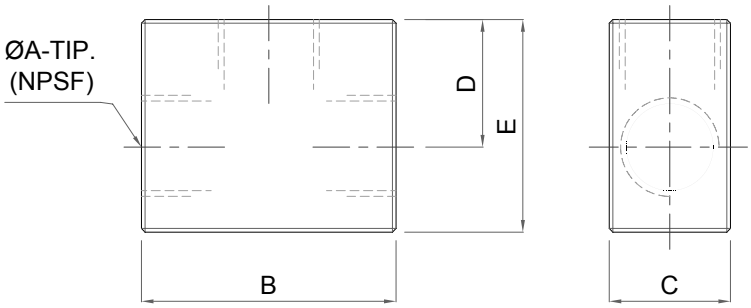

Material: Zinc Coated Steel

MODEL	øA	B	C	D	E
CU-137-A	1/8”	28	14	14	21
CU-137-B	1/4”	40	20	23	35
CU-137-C	3/8”	42	20	24	35
CU-137-D	1/2”	61	30	24	39

Dualine Tee - CU-1008

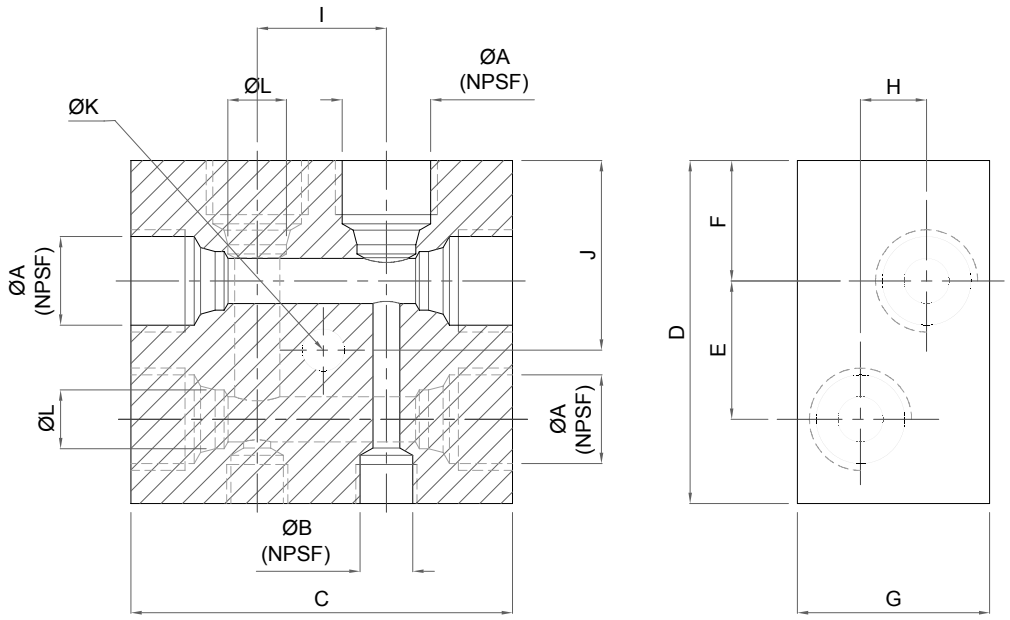

Material: Zinc Coated Steel

MODEL	øA	øB	C	D	E	F	G	H	I	J	øK	øL
CU-1008-BB	1/8”	-	51	40	16	14	22	8	17	22	5,5	6,5
CU-1008-DD	3/8”	-	63,5	57	23	20	32	11	21,5	31,5	7	9,7
CU-1008-DD1	3/8”	1/8”										

CONNECTION BLOCK - CU-1080-B1

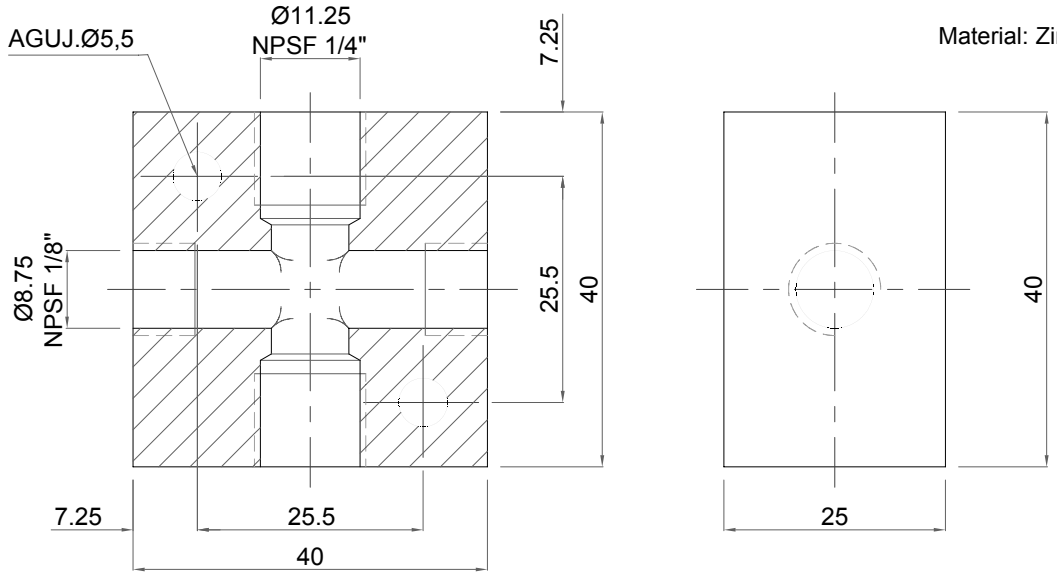

Material: Zinc Coated Steel

Relief Valve - CU-962-B

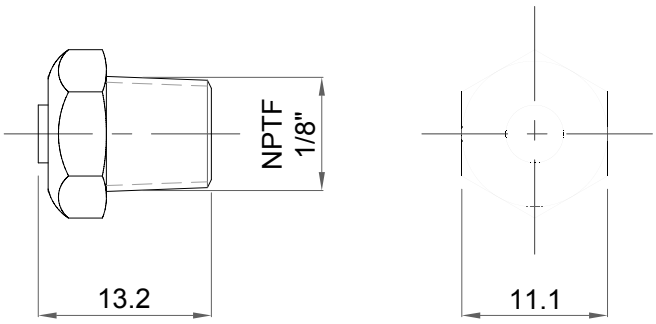

Relief Pressure: 0,07 a 0,35 bar

Relief Valve - CU-1975-B1

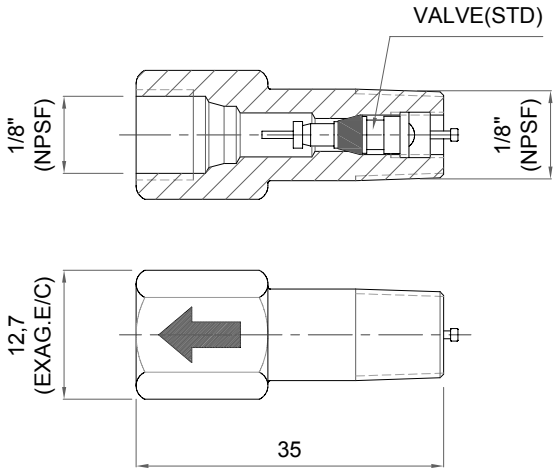

Opening Pressure: 8 a 9 bar.

Relief Valve - CU-1997-B1

Opening Pressure: 8 a 9 bar.

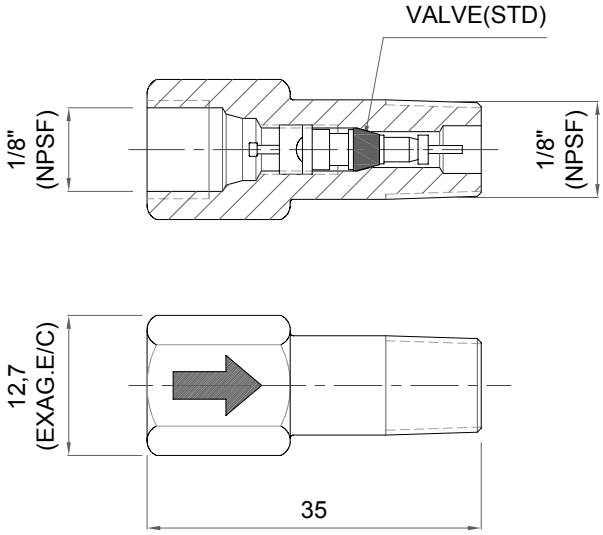

Non Return Valve - CU-1987-A1

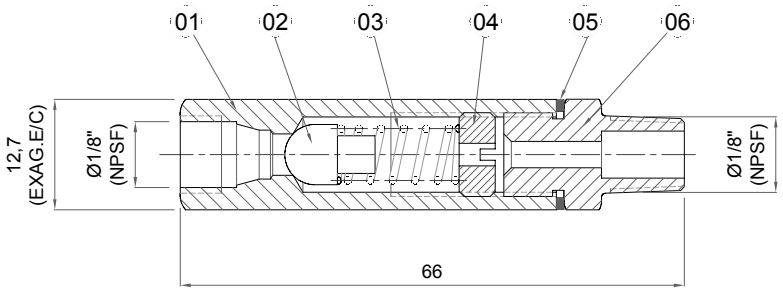

Part List

Pos.	Description	Quantity
1	Body	1
2	Valve	1
3	Spring	1
4	Adjusting Screw	1
5	Washer	1
6	Connector	1

Opening Pressure: 8 a 10 bar.

Non Return Valve - CU-887-D2

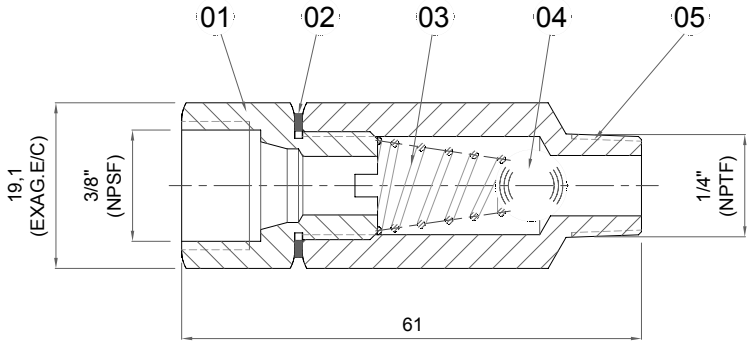

Part List

Pos.	Description	Qunatity
1	Connector	1
2	Washer	1
3	Spring	1
4	Ball	1
5	Body	1

Opening Pressure: 5 a 7 bar.

Non Return Valve - CU-1087-B2

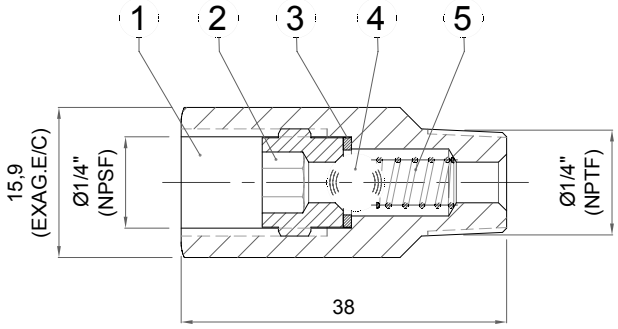

Part List

Pos.	Description	Quantity
1	Body	1
2	Seat screw	1
3	Washer	1
4	Ball	1
5	Spring	1

Opening Pressure: 3 a 5 bar.

Non Return Valve - CU-2087-B

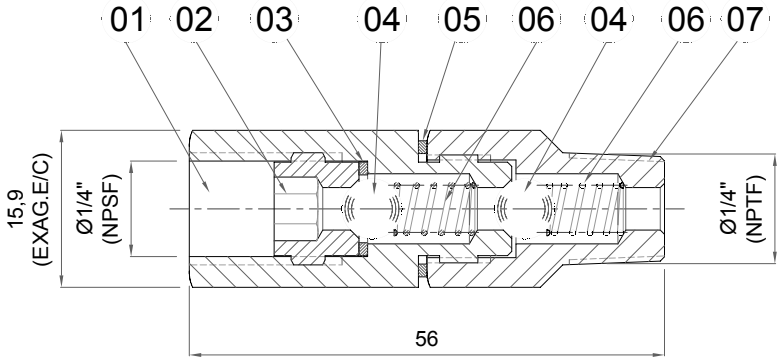

Parts List

Pos.	Description	Quantity
1	Body	1
2	Seat screw	1
3	Washer	1
4	Ball	2
5	Washer	1
6	Spring	2
7	Connector	1

Opening Pressure: 8 a 10 bar.

Rotating Connector - CU-990

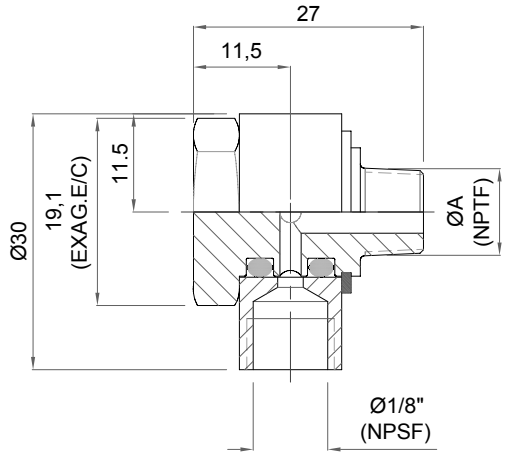

Parts List

Pos.	Descirption	Code
1	Connector	CG-001
2	Locating Ring	CG-002
3	Seal	CG-003
4	Body	CG-004

MODEL	øA
CU-990-0	1/16”
CU-990-A	1/8”

Max. Operating Pressure	100 bar
Maximum RPM	100

Rotating Connector - CU-989-T

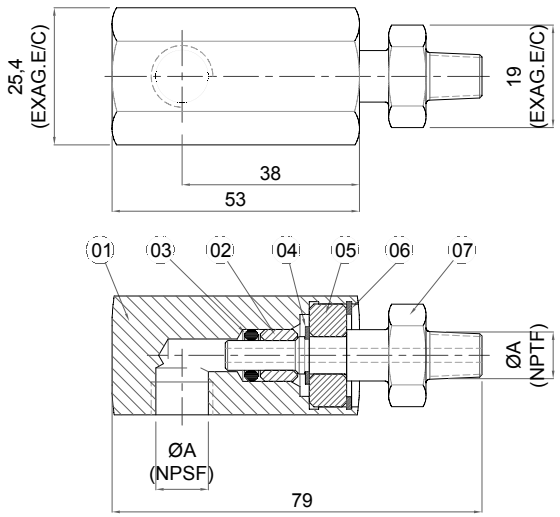

Parts List

Pos.	Description	Códe
1	Body	CCO-001
2	Inner Bush	CCO-002
3	Seal	CCO-003
4	Locating Ring	CCO-004
5	Outer Bush	CCO-005
6	Locating Ring	CCO-006
7	Connector	CCO-007

MODEL	øA	RPM (Máx)
CU-989-5-T	1/8”	100
CU-989-6-T	1/4”	100
CU-989-7-T	3/8”	100

Max. Operating Pressure	100 bar
Maximum RPM	100

Rotating Connector - CU-994

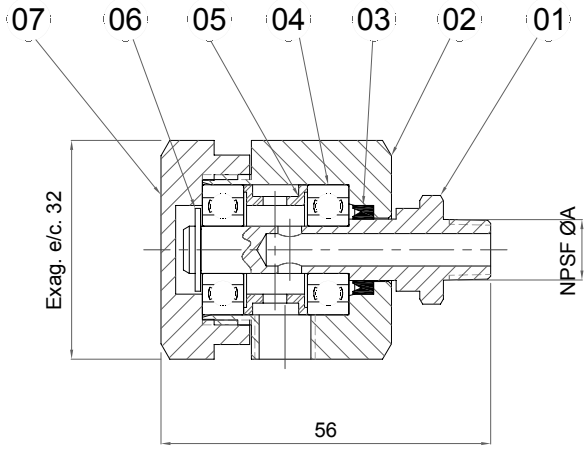

Parts List

Pos.	Description	Códe
1	Connector	CC-001
2	Body	CC-002
3	Packing	CC-003
4	Bearing	CC-004
5	Divider	CC-005
6	Locating Ring	CC-006
7	Cover	CC-007

MODEL	øA
CU-994-5	1/8”
CU-994-6	1/4”

Max. Operating Pressurew	100 bar
Maximum RPM	1500

Nozzle - PGC-1

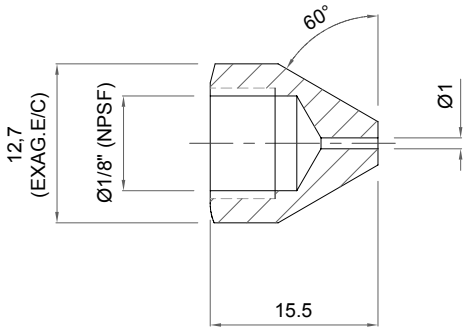

Code

PGC-1

Brushes - CLC-C

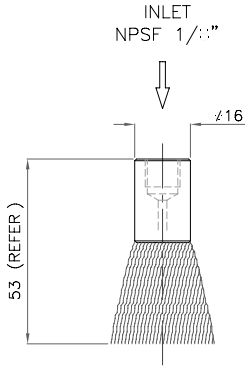

CLC−C16

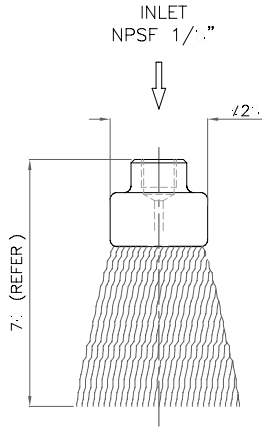

CLC−C2

Code

CLC-C ☐

Body	
ø 16	16
ø 28	28

☐

Fibres	
Standard	1
Stainless	2

Flat Plastic Brushes - CLC-P

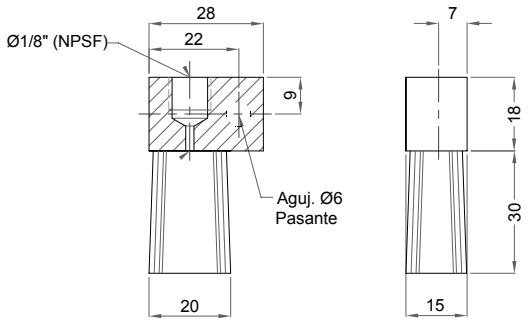

CLC-P20

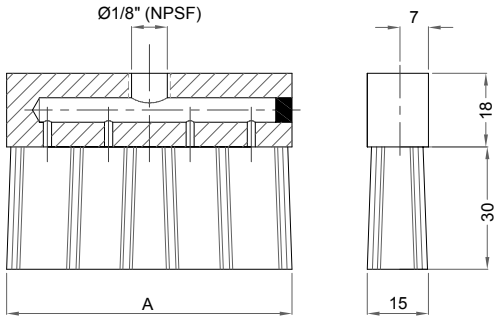

Model	A
CLC-P50	50
CLC-P80	80
CLC-P160	160

Material: Nylon

Requirement Code

CLC-P ☐

Body	
Ancho = 20	20
Ancho = 50	50
Ancho = 80	80
Ancho = 160	160

Filter TF-0

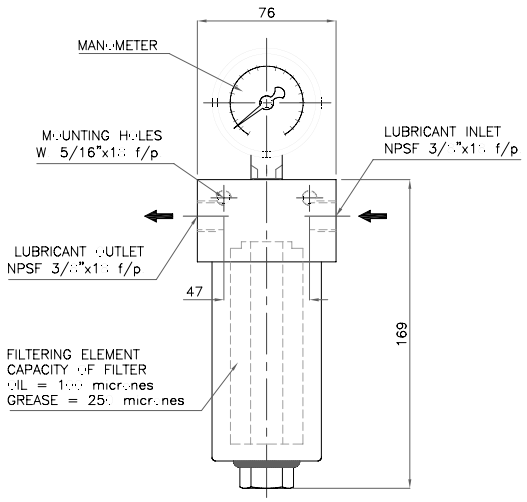

TF-0 filters are used in oil or grease supply lines. They retain foreign particles in lubricant thus preventing damage
to component in the lubrication systems.
They include filter elements of 100u or 250.
Units are fitted with a by-pass valve and a pressure gauge.

Max. operating pressure	70 bar
Micronaje	100 ó 250µ
Differencian pressure	3 bar

Filtre TF-1 with mechanical indicator

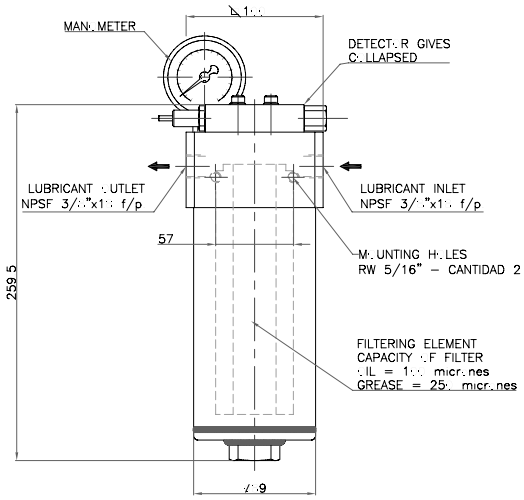

TF-1 filters are used in oil or grease supply lines. They retain foreign particles in lubricant thus preventing damage to component in the lubrication systems.
They include filter elements of 100u or 250.
Units are fitted with a by-pass valve and a pressure gauge.
A mechanical indicator on these units can be used to activate an electrical switch for dirty filter alarm.

Max. operating pressure	70 bar
Micronaje	100 ó 250µ
Differencian pressure	3 bar

Filtre TF-11

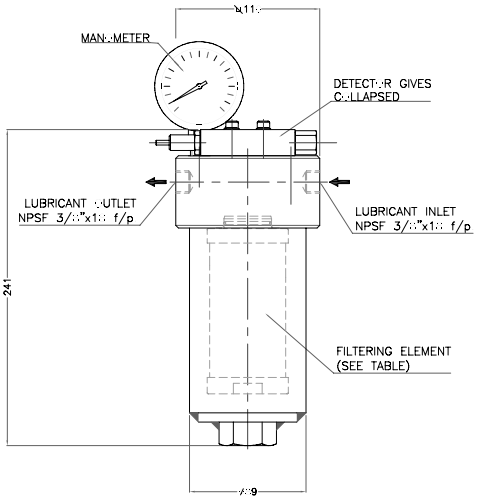

TF-11 filter to be used in oil supply lines. They retain foreign particles in lubricant and prevent damage to the lubrication system components.
They are available with elements rated 10, 25u or 40u. They also include an internal by-pass valve.
A mechanical indicator on these units can be used to activate an electrical switch for dirty filter alarm.
The TF-11-WR desgn has a filter element that it retains the moisture that may be present in the oil.

MODEL	Filtration Rate
TF-11-10	10 µ
TF-11-25	25 µ
TF-11-40	40 µ
TF-11-WR	Recover Humidity

Max. Work Pressure	70 bar
Micronaje	10, 25 ó 40µ
Diferencial pressure	3 bar

*Model TF-11-WR has a fitrant element which retains the oil humidity.

Filter TF-2

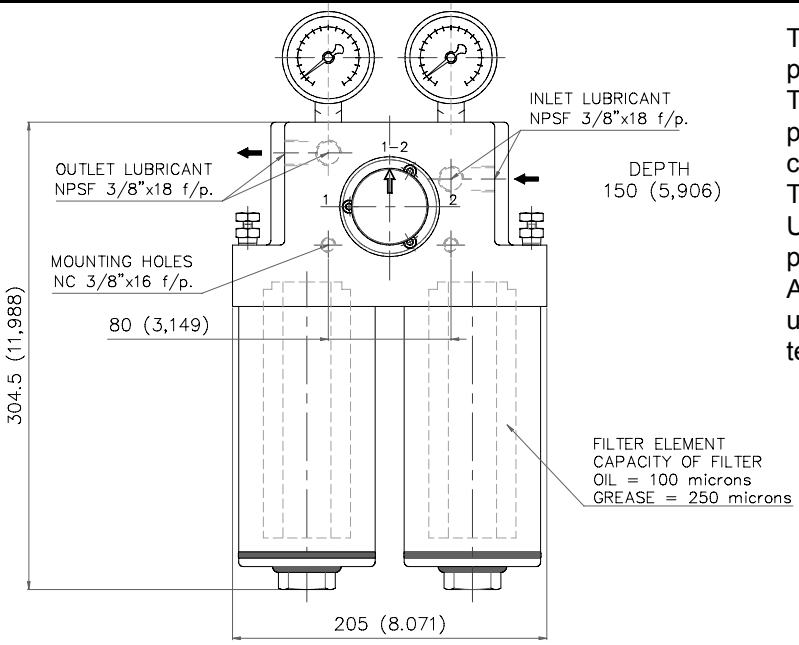

TF-2 duplex filters are used in oil or grease supply lines.
They retain foreign particles in lubricant thus preventing damage to components in the lubrication systems.
They include filter elements of 100u or 250.
Units are fitted with a filter selection valve, a by-pass valve and pressure gauges.
A mechanical indicator on these units can be used to activate an electrical switch for dirty filter alarm.

Max. Operating Pressure	70 bar
Micronaje	100 ó 250µ
Diferencial pressure	3 bar

Line Filter FCSL-3/8

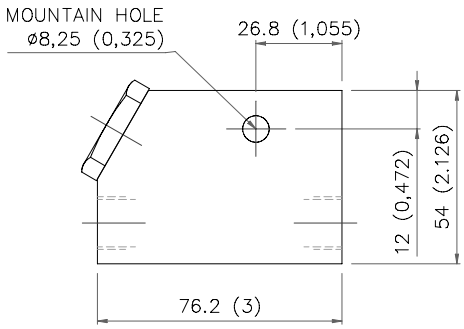

FCSL line filters are used in oil or grease supply lines.
They retain foreign particles in lubricant thus preventing damage to components in the lubrication systems.
They include filter elements of 100u or 250.
A mechanical indicator on these units can be used to activate an electrical switch for dirty filter alarm.
Maximum operating pressure 350 Bar.

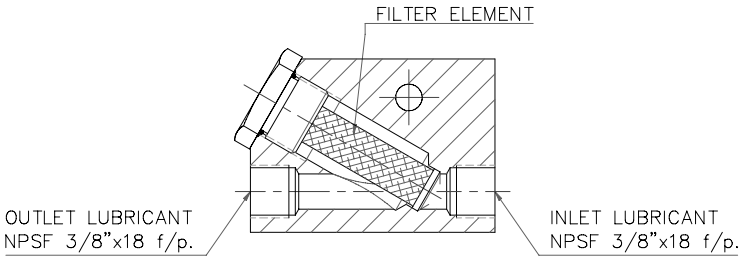

Max.Operating pressure	350 bar
Micronaje	100 ó 250µ
Diferencial Pressure	3 bar

Tube Clamps - CU-301

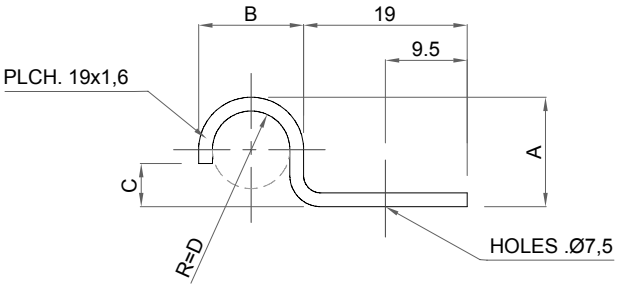

Material: Zinc Coated Steel

MODEL	øTube	A	B	C	D
CU-301-A1	3/16”	6,5	8,5	2	2,5
CU-301-B1	1/4”	9,6	12,7	3,5	3
CU-301-D1	3/8”	12,7	16	5	4,5

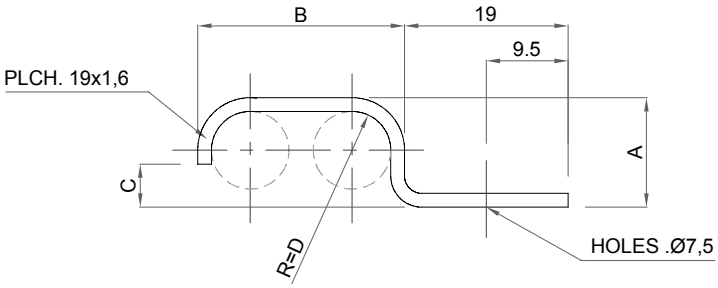

MODEL	øTube	A	B	C	D
CU-301-A2	3/16”(2)	6,5	13,5	2	2
CU-301-A3	3/16”(3)	6,5	19	2	2
CU-301-B2	1/4”(2)	9,6	19	3,5	3
CU-301-B3	1/4”(3)	9,6	22	3,5	3
CU-301-D2	3/8”(2)	12,7	25,5	5	4,5

Tube Clamps - CU-1301

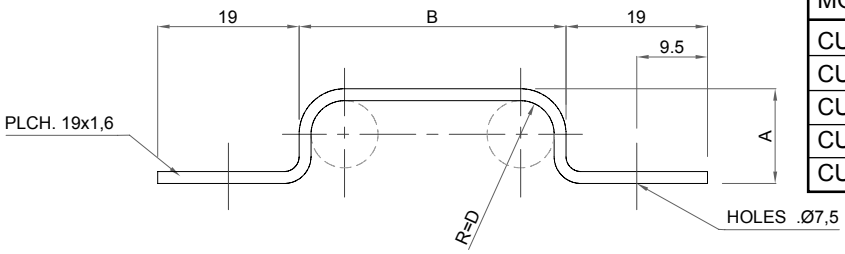

Material: Zinc Coated Steel

MODEL	øTube	A	B	C	D
CU-1301-A4	3/16”(4)	6,5	22	-	2
CU-1301-A6	3/16”(6)	6,5	32	-	2
CU-1301-B4	1/4”(4)	9,6	32	-	3
CU-1301-B6	1/4”(6)	9,6	44,5	-	3
CU-1301-D3	3/8”(3)	12,7	35	-	4,5

One Way Coupling CU-967

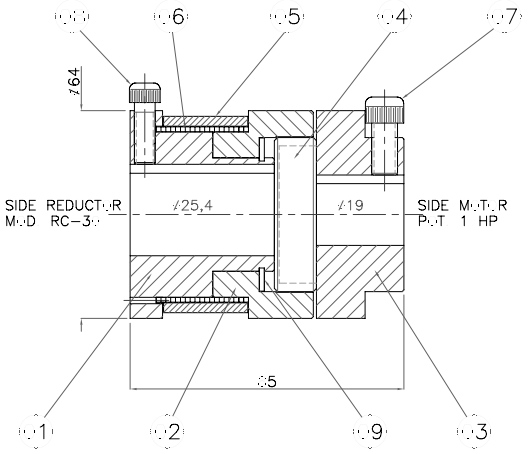

Pos.	Description	Quantity
1	Input Body	1
2	Coupling Body	1
3	Output Body	1
4	Spacer	1
5	Sleeve	1
6	Spring	1
7	Screw	1
8	Screw	1
9	Locating Ring	1

One Way Coupling CU-968

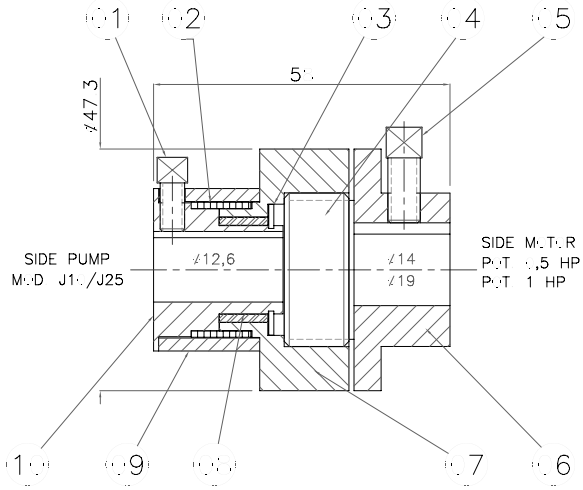

Pos.	Denominación	Quantity
1	Screw	1
2	Spring	1
3	Locating Ring	1
4	Clutch	1
5	Screw	1
6	Input Body	1
7	Coupling Body	1
8	Bearling	1
9	Sleeve	1
10	Output Body	1

MODEL	Pump	Shaft size
CU-968-10	BCE-J10	ø 14
CU-968-25	BCE-J25	ø 19

Flexible Coupling CU-969

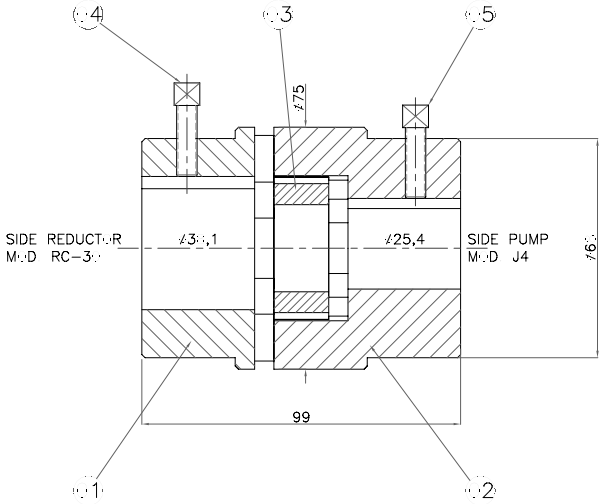

Pos.	Description	Qunatity
1	Input Body	1
2	Output Body	1
3	Spider	1
4	Screw	1
5	Screw	1

Spray control valve VCCS-S1 / VCCS-S1-I

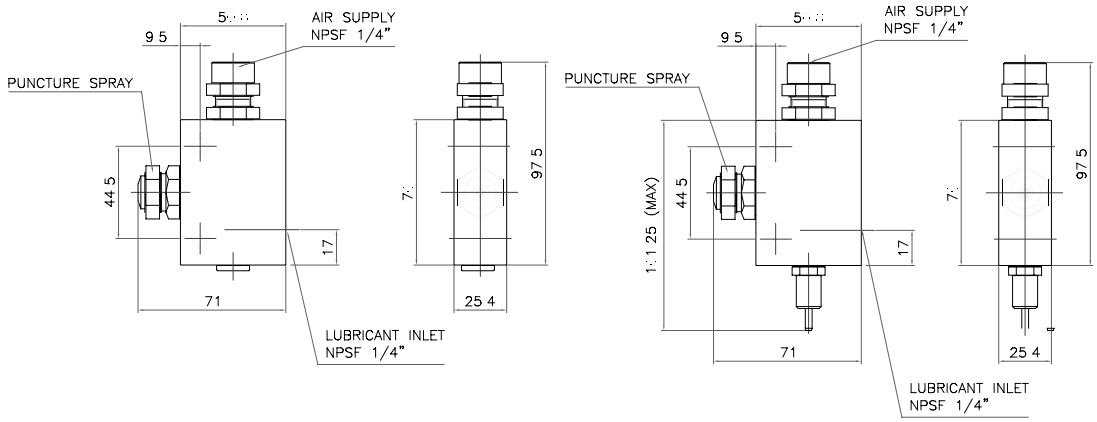

Spray Manifold with nozzle CSMP

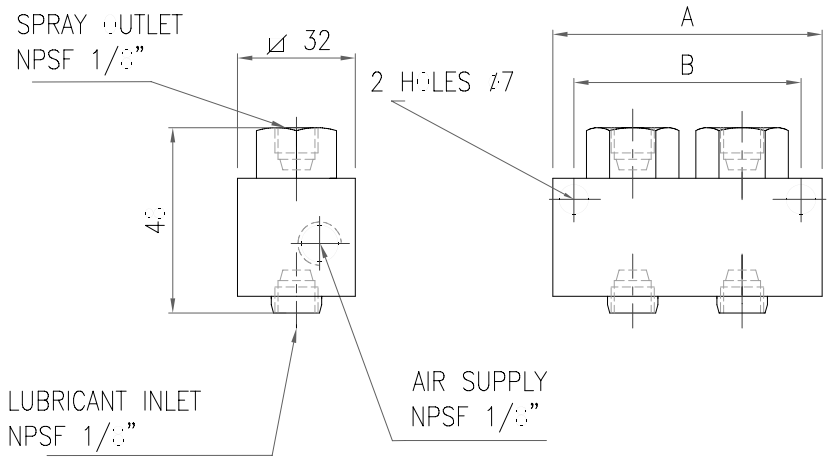

MODEL	A	B
CSMP-1	38	28
CSMP-2	64	54
CSMP-3	90	80
CSMP-4	116	106
CSMP-5	142	132

Spray Valve Assembly CU-922-C

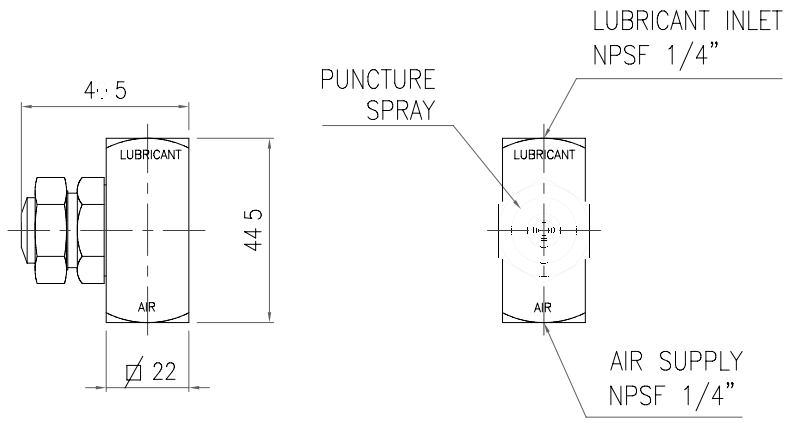

Bundy Tubing

Zinc Coated Steel Tube in accordance with ASTM-A 254 specification.

Outside Diameter		Wall Thickness		Operating Pressure		Weight		Minimum Bending Radius	
Inches	mm.	Inches	mm.	psi	kg/cm²	m/kg.	lb/pie	manual	bender
3/16”	4,76	0,028	0,711	4791	336	14,06	0,048	3/4”	9/16”
1/4”	6,35	0,030	0,762	3840	269	9,49	0,071	1 1/8”	3/4”
3/8”	9,52	0,030	0,762	2560	179	6,05	0,111	2 5/8”	1 1/8”

Schedule Piping in accordance with ASTM-A53 specification

Outside Diameter		Wall Thickness		Operating Pressure (20º)		Weight	
Inches	mm.	Inches	mm.	psi	kg/cm²	m/kg.	lb/pie
1/2”	21,3	0,109	2,77	3714	360	1,267	0,768
3/4”	26,7	0,113	2,87	3071	215	1,689	1,024
1”	33,4	0,133	3,38	2886	202	2,505	1,519
1 1/2”	48,3	0,145	3,68	2171	152	4,054	2,459
2”	60,3	0,154	3,91	1857	130	5,444	3,302

Copper Tube

Outside Diameter		Wall Thickness		Operating Pressure (20º)		Weight	
Inches	mm.	Inches	mm.	psi	kg/cm²	m/kg.	lb/pie
3/16”	4,76	0,027	0,70	1309,6	91,67	0,090	0,055
1/4”	6,35	0,027	0,70	888,9	62,22	0,110	0,066
3/8”	9,52	0,027	0,70	541,9	37,93	0,180	0,109

Nylon Tube

Outside Diameter		Wall Thickness		Operating Pressure		Test Pressure (20º)	
Inches	mm.	Inches	mm.	psi	kg/cm²	psi	kg/cm²
3/16”	4,76	0,023	0,60	600	42	1800	126
1/4”	6,35	0,031	0,80	600	42	1800	126
3/8”	9,52	0,047	1,20	600	42	1800	126

SPECIAL DEVELOPMENTS

1

Pneumatic Booster Pump

2

Pneumatic Operated Pump for grease or oil

3

Pneumatic device for pumping viscous products.

4

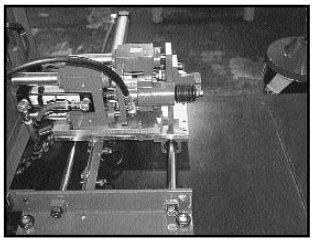

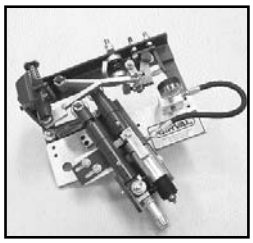

Automatic lubricators for moving grease points

5

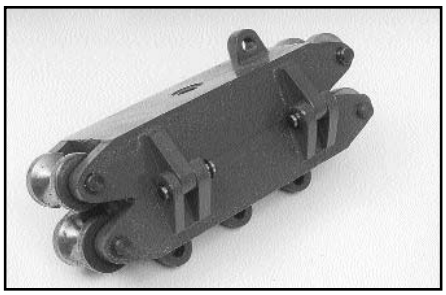

lubricator for steel cables

6

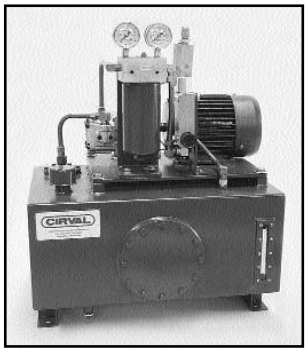

Oil circulation system

7

Slinger sets for oil of visible drop.

8

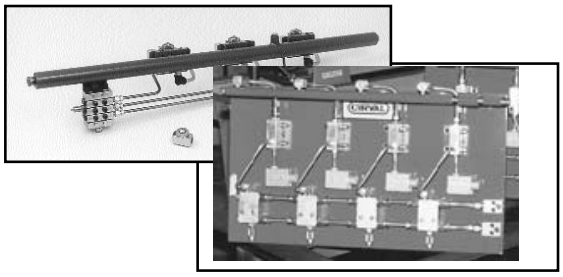

Spray panels and lances for gear lubrication systems

9

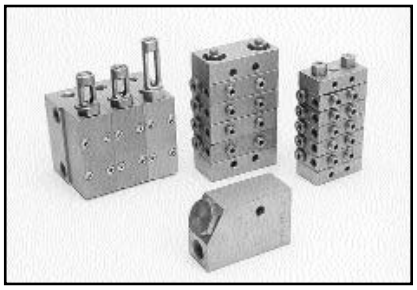

Nickle plated Valves and Accesories

10

Containers for provision of grease to bulk with supply pneumatic bomb. Capacity 1000 kg.

11

Container for 600 kG of special grease

INDUSTRIAL PLANT

Our industrial plant(floor) is located in Rosario's city, Province of Santa Fe, Republic Argentina.
There we have 2000 m² where with machines of last generation, produced(operated on) by highly qualified personnel, we produce all the components CIRVAL
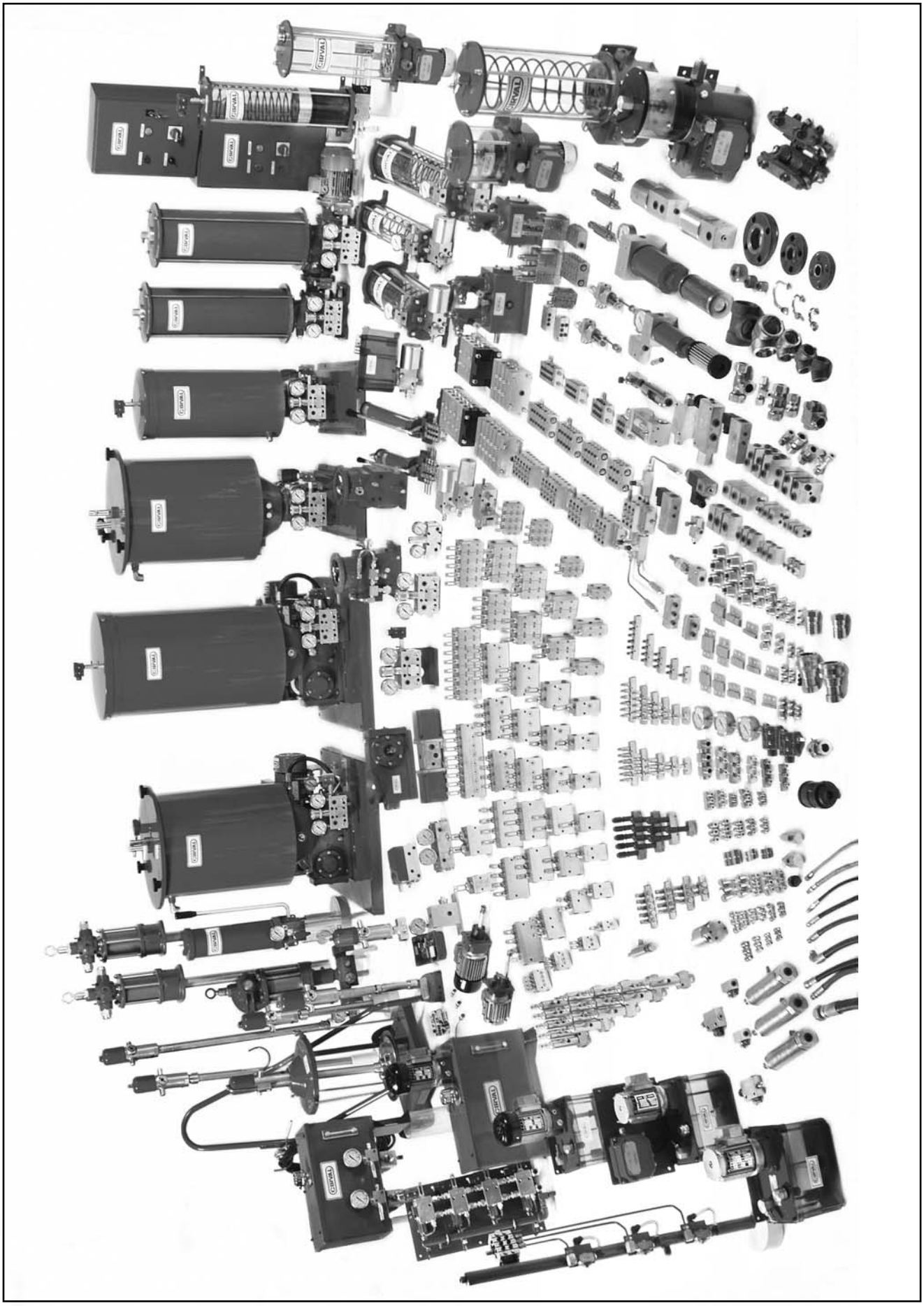
FOTO PACK OF PRODUCTS