Hydraulic Power Pack Modular System

SA4

p_{max} up to 250 bar • Q 0.5 - 50 L/min

HA 7100
8/2006

Replaces
HA 7100 1/2005

- **Building of customized power packs using standardized sub assemblies**
- **Tank capacities from 10 to 250 L**
- **Systems with gear or piston pumps, wide range of flow rates with vertical layout and imersed pump**
- **Versatile pressure and flow control possibilities**
- **Enable building of hydraulic circuits as vertical or horizontal stacking assemblies**
  Connection of up to 8 horizontal sections possible
- **Design and accessories according to customer specification**

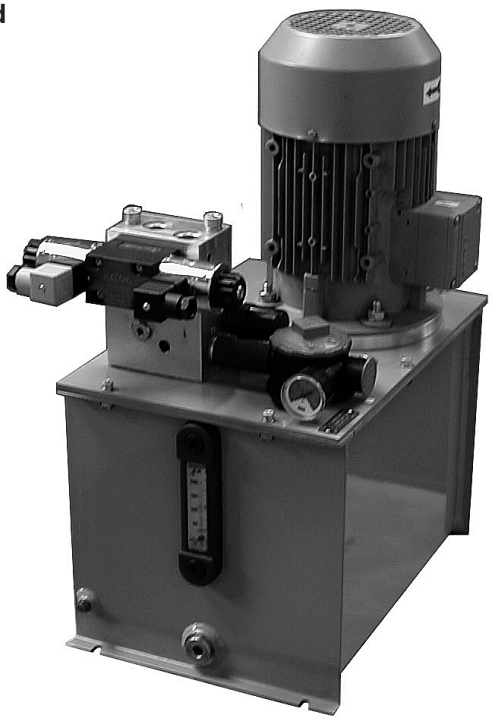

Functional Description

This technical information servers as a basic summary for building of hydraulic power packs designed of standedized sub-assemblies. Table 1 enables selection of the required combination (tank capacity, type of pump, flow rate, pressure, size of the electric motor, type of pressure control etc.).If you cannot find the required solution using the components shown below, please consult us. We can offer special tanks, remote control of components, drives with double pumps, special connection of componets etc. On request, also the separate components can be delivered. A questionnaire, which is enclosed to this information, also the should help you to specify your requirements. Please enclose also the respective circuit diagram, the required installation dimensions, as well as the size and orientation of connecting ports.
So as we can offer you a power pack, which will comply completely with your requirements, we need exact information about your system.

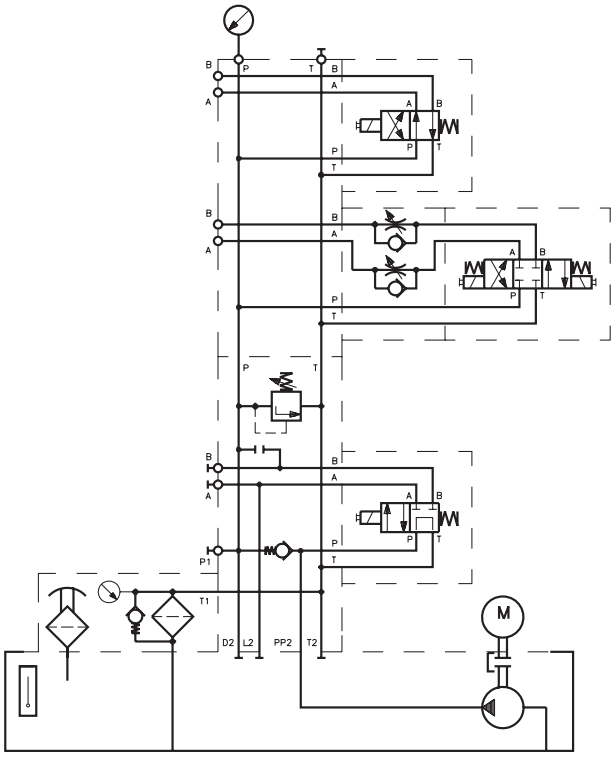

SA4

1 Tank
2 Drive/ Bell housing
3 Pump
4 Electric motor
5 Base block (safety block of the accumulator)
6 Horizontal stacking assembly
7 Vertical stacking assembly
8 Pressure gauge
9 Return filter with by-pass, integrated air breather/filler and clogging indicator
10 Continuous level gauge
11 Magnetic drain plug
12 Earthing point

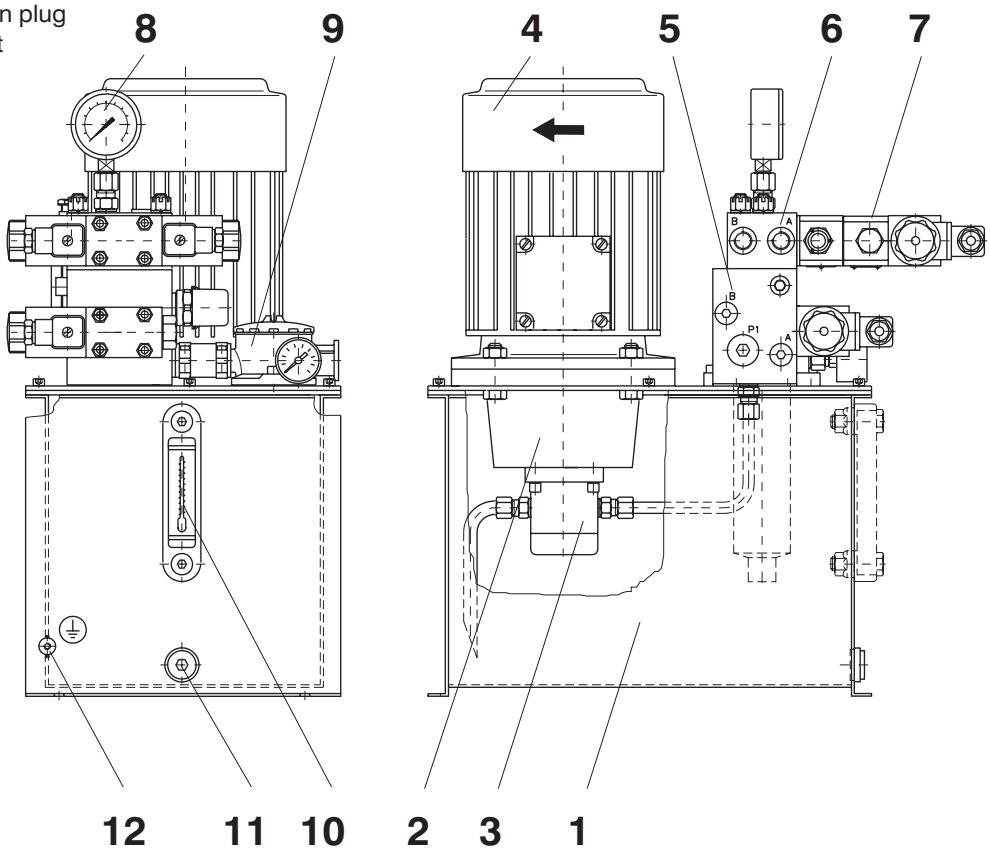

Tab. 1

Type of the power pack	Tank capacity [L]	Type of the pump	Flow rate [L/min]	Working pressurre [bar]	Size of the electric motor	Q/p Table No.	Type of the control
SA4-10C	10	gear pump	0.5 - 10.5	250	80, 90	3	14
SA4-20C	20	gear pump	0.5 - 21.8	250	80, 90, 100, 112	3	14, 16
SA4-30C	30	gear pump	1.9 - 23.6	250	80, 90, 100, 112	2 - 3	14, 15, 16
SA4-40C	40	gear pump	1.9 - 23.6	250	80, 90, 100, 112	2 - 3	14, 15, 16
SA4-45U	45	gear pump	1.9 - 23.6	250	80, 90, 100, 112	2 -3	14, 15, 16
SA4-60H	60	gear pump	6 - 36	250	80, 90, 100, 112, 132	2 - 4	14, 15, 16, 18
		variable piston pump	up to 29			5	17
SA4-60U	60	gear pump	6 - 36	250	80, 90, 100, 112, 132	2 - 4	14, 15, 16, 18
		variable piston pump	up to 29			5	17
SA4-100H	100	gear pump	6 - 42	250	90, 100, 112, 132	2 - 4	14, 15, 16, 18
		variable piston pump	up to 29			5	17
SA4-250H	250	gear pump	up to 50	250	80, 90, 100, 112, 132	2 - 4	14, 15, 16, 18
		variable piston pump	up to 50		90, 100, 112, 132	5	17

Design of the Power Pack from the Standardized Sub-assemblies

1 Location
Clear description of the working environment of the power pack.

2 Working conditions
Stating of the power pack working cycle (service character).

3 Working pressure p [bar]
Pressure which is necessary to ensure the required forces and torques.

4 Flow rate Q [L/min]
Flow rate which is necessary to ensure the required velocites and revolutions.

5 Type of the pump
To be determined after evaluation of the points mentioned above.
The following pumps are available: - gear pumps
- variable piston pumps

6 Pump displacement
See point 7.

7 Electric motor
By the use of table 1 and 2 to 5 and according to the required flow rate and pressure, the respective displacement of the pump,as well as the power and revolutions of the electric motor are to be determined. These data are to be put down into the questionwaire, together with the information regarding the network voltage and frequency, type of enclosure, climatic endurance etc.
The tables also include the basic drive dimensions - diameter of the flange and the total height of the electric motor including the flange thickness or the thickness of the damping ring (Fig. 2 and 3). The damping rubber ring is normally delireved with the drives with the variable piston pump. On request, it can also be delivered with the gear pumps.

8 Lay out of the drive
Vertical - with all types of gear pumps and with axial piston pumps with pressure control (Fig. 2 and 3).
Horizontal - only for special applications and after consultation with us.

1 Electric motor
2 Gear pump
3 Variable piston pump
4 Flange
5 Coupling
6 Damping rubber ring

S - suction line
P - pressure line
L - leakage
X - control

Fig. 2

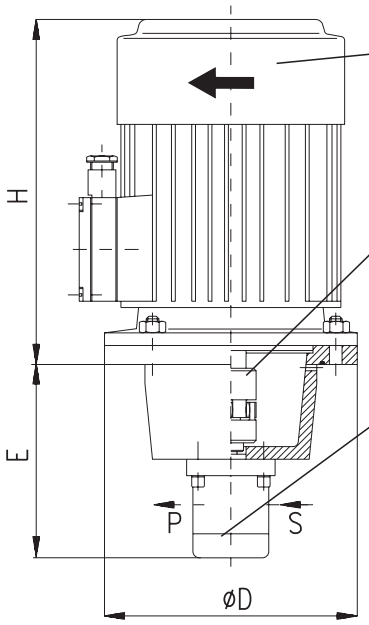

Fig. 3

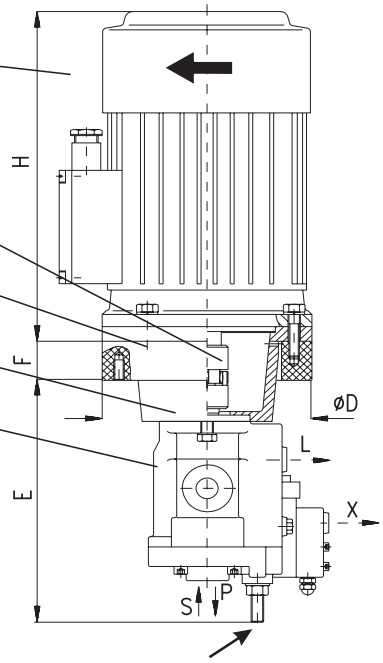

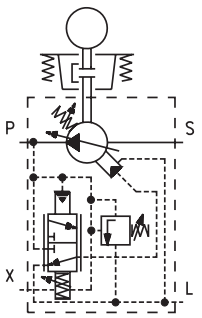

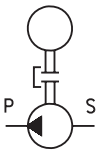

The screw for pump geometric volume setting.*
L 25C .... 1,20 [cm^3. ot^{-1}] screw
K 38C .... 1,81 [cm^3. ot^{-1}] screw

Tab. 2a Gear Pumps Size 1 - Series P23

Data of the electric motor			Displacement of the pump [cm³]												Dimension of the drive		
			0,8		1,2		1,6		2,1		2,5		3,3				
Size	**n** [min⁻¹]	**p** [kW]	**Q/p** [L/min]/[bar]												∅ **D** [mm]	**H** [mm]	**E** max. [mm]
80	1395	0.55	1.1	200	1.6	170	2.1	125	2.8	95	3.3	80	4.4	60	200	248	174
80	1395	0.75			1.6	200	2.1	170	2.8	130	3.3	110	4.4	80	200	248	174
90	1410	1.10					2.1	200	2.8	190	3.3	160	4.4	120	200	296	174
90	1410	1.50							2.8	200	3.3	200	4.4	165	200	296	174
100	1420	2.20											4.4	200	250	328	192
100	1420	3.00															
71	2790	0.55	2.1	125	3.1	85	4.2	60	5.6	45	6.6	40	8.7	30	160	225	157
80	2850	0.75	2.2	165	3.2	110	4.3	85	5.7	65	6.8	55	8.9	40	200	248	174
80	2835	1.10	2.2	200	3.2	160	4.3	125	5.7	95	6.7	80	8.9	60	200	248	174
90	2860	1.50			3.2	200	4.3	165	5.7	125	6.8	105	9.0	80	200	296	174
90	2850	2.20					4.3	200	5.7	185	6.8	155	8.9	120	200	296	174
100	2895	3.00											9.1	160	250	328	192

Tab. 2b Gear Pumps Size 1 - Series P23

Data of the electric motor			Displacement of the pump [cm³]												Dimension of the drive		
			3,6		4,4		4,8		5,8		6,2		7,9				
Size	**n** [min⁻¹]	**p** [kW]	**Q/p** [L/min]/[bar]												∅ **D** [mm]	**H** [mm]	**E** max. [mm]
80	1395	0.55	4.8	55	5.8	45	6.4	40	7.7	35	8.2	30	10.5	25	200	248	174
80	1395	0.75	4.8	75	5.8	60	6.4	55	7.7	45	8.2	45	10.5	35	200	248	174
90	1410	1.10	4.8	110	5.9	90	6.4	80	7.8	70	8.3	65	10.6	50	200	296	174
90	1410	1.50	4.8	150	5.9	120	6.4	110	7.8	95	8.3	85	10.6	70	200	296	174
100	1420	2.20	4.8	200	5.9	180	6.5	165	7.8	135	8.4	125	10.7	100	250	328	192
100	1420	3.00			5.9	200	6.5	200	7.8	160	8.4	160	10.7	135	250	328	192
71	2790	0.55	9.5	30	11.7	25	12.7	20	15.4	20	16.4	15	20.9	15	160	225	157
80	2850	0.75	9.7	35	11.9	30	13.0	30	15.7	25	16.8	20	21.4	15	200	248	174
80	2835	1.10	9.7	55	11.9	45	12.9	40	15.6	35	16.7	30	21.3	25	200	248	174
90	2860	1.50	9.7	75	11.9	60	13.0	55	15.8	45	16.8	45	21.5	35	200	296	174
90	2850	2.20	9.7	110	11.9	90	13.0	80	15.7	65	16.8	65	21.4	50	200	296	174
100	2895	3.00	9.9	145	12.0	120	13.2	110	16.0	90	17.1	85	21.7	65	250	328	192

Tab. 3a Gear Pumps Size 2 - Series T2

Data of the electric motor			Displacement of the pump [cm³]										Dimension of the drive		
			4		5		6,3		8		10				
Size	**n** [min⁻¹]	**p** [kW]	**Q/p** [L/min]/[bar]										∅ **D** [mm]	**H** [mm]	**E** max. [mm]
90	1410	1.1	5.4	100	6.7	80	8.5	65	10.8	50	13.5	40	200	296	222
90	1410	1.5	5.4	135	6.7	110	8.5	85	10.8	65	13.5	55	200	296	222
100	1420	2.2	5.4	195	6.7	155	8.5	125	10.8	100	13.5	80	250	328	228
100	1420	3.0	5.4	270	6.7	215	8.5	170	10.8	135	13.5	105	250	328	228
112	1440	4.0			6.8	270	8.6	225	11.0	175	13.8	140	250	348	228
132	1455	5.5							11.0	240	13.8	190	300	389	248
132	1455	7.5									13.8	250	300	389	248

Tab. 3b Gear Pumps Size 2 - Series T2

Data of the electric motor			Displacement of the pump [cm³]								Dimension of the drive		
			12,5		16		20		25				
Size	**n** [min⁻¹]	**p** [kW]	**Q/p** [L/min]/[bar]								∅ **D** [mm]	**H** [mm]	**E** max. [mm]
90	1410	1.1	16.9	30	21.6	25	27.0	20	33.7	15	200	296	222
90	1410	1.5	16.9	45	21.6	35	27.0	25	33.7	20	200	296	222
100	1420	2.2	16.9	65	21.6	50	27.0	40	33.7	30	250	328	228
100	1420	3.0	16.9	85	21.6	65	27.5	55	33.7	45	250	328	228
112	1440	4.0	17.3	110	22.1	90	27.5	70	34.6	55	250	348	228
132	1455	5.5	17.3	155	22.1	120	27.5	95	34.6	75	300	389	248
132	1455	7.5	17.3	210	22.1	165	27.5	130	34.6	105	300	389	248

Tab. 4 Gear Pumps Size 3 - Series Q

Data of the electric motor			Displacement of the pump [cm³]								Dimension of the drive		
			10		17		27		34				
Size	n [min⁻¹]	p [kW]	Q/p [L/min]/[bar]								∅ D [mm]	H [mm]	E max. [mm]
100	1420	3.0	13.5	105	22.9	65	36.9	40	45.9	30	250	328	255
112	1440	4.0	13.8	140	23.3	85	36.9	50	46.5	40	250	348	255
132	1455	5.5	13.8	190	23.5	110	37.3	70	47.0	55	300	389	275
132	1455	7.5			23.5	155	37.3	95	47.0	75	300	389	275

Tab. 5 Variable Pistons Pumps

Data of the electric motor			Maximum geometric volume of pump [cm3]				Dimension of the drive			L25C	K38C
			L25C		K38C						
			*25		*38						
Size	n [min⁻¹]	p [kW]	max. Q/p [L/min]/[bar]				∅ D [mm]	H [mm]	F [mm]	E max. [mm]	E max. [mm]
100	1420	2.2	33.7	35			250	328	45	296	
100	1420	3.0	33.7	50			250	328	45	296	
112	1440	4.0	34.1	65			250	348	45	296	
132	1455	5.5	34.1	90	52.5	55	300	389	50	296	313
132	1455	7.5	34.1	120	52.5	75	300	389	50	296	313

* Maximum geometric volume of pump is adjusted with setting screw (see.Pic No.3)
L 25C .... 1,20 [cm³. ot⁻¹](screw), K 38C .... 1,81 [cm³. ot⁻¹](screw)

9 Tank capacity

The following are our rocommendation as to determination of the capacity:
- hydraulic circuits with fixed pumps - from 3 up to 6 multiple of the pump flow rate [L/min].
- hydraulic circuits with variable pumps - from 2 up to 4 multiple of the pump flow rate [L/min]

Tanks normally delivered:

Fig. 4
Tank models 10C, 20C, 30C, 40C

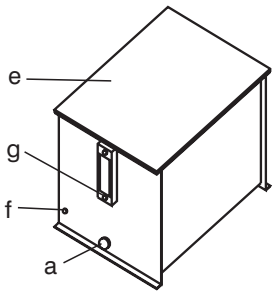

Fig. 5
Tank models 45U, 60U

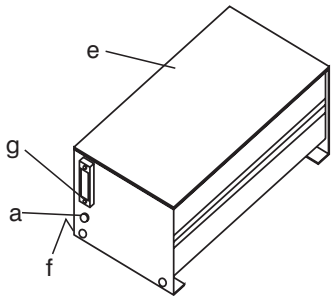

Fig. 6
Tank models 60H, 100H, 250H

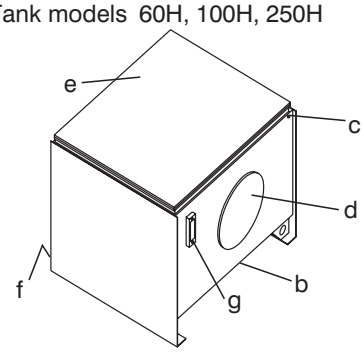

Parts delivered with a tank (Fig.4, 5, 6)**:**
a) Drain plug on the front side of the tank - with capacites 10H, 20H, 30H, 40H, 45U, 60U
b) Drain plug on the bottom of the tank - with capacites 60H, 100H, 250H
c) Leakage drain plug on the through collector at the upper side of the tank - with capacites 60H, 100H, 250H
d) Cleaning cover on the side of the tank - with capacites 60H, 100H, 250H
e) Bolt mounted cover sealad against dust penetration
f) Earthing bolt
g) Continuous level gauge

Fig. 7

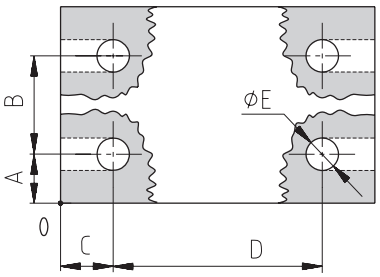

Tank designation	Tank capacity [L]	Tank dimension Length x width x height [mm]	Dimensions of fix slots [mm] (Fig. 7)				
			A	B	C	D	∅ E
10C	10	400 x 280 x 186	30	220	6	388	9 (slot)
20C	20	400 x 280 x 274	30	220	6	388	9 (slot)
30C	30	500 x 320 x 285	30	260	10,5	479	11 (slot)
40C	40	500 x 320 x 364	30	260	10,5	479	11 (slot)
45U	45	700 x 370 x 329	35	300	25	650	11
60U	60	700 x 370 x 394	35	300	25	650	11
60H	60	600 x 470 x 485	35	400	30	540	14
100H	100	700 x 550 x 565	25	500	30	640	14
250H	250	1006 x 610 x 680	20	570	47	912	14

10 Painting

The following are the standard paintings of the outside surface of the tank:
– top coat - RAL 7030 KOMAXIT (stone gray)
– aluminum parts - without surface treatment
– hydraulic components - manufactur's standard painting
Other paints or special surface treatment on request.

Component assembly on the tank cover

In addition to drive unit, also the base block and filtering unit are usually situeted on the tank cover. The base block is connected to the pump output. It comprises a check valve and pressure valve (or some other components) according to the pressure control system used (see the circuit diagrams in Fig. 14 to 18). It also enables other components of the hydraulic circuit to be connected, e.g.:
– oil filter
– subplates or connecting plates with the respective components
– accumulator

11 Pressure control

– **Pressure relief valve VT** (Fig. 14) - used with all types of gear pumps.
– **Unloading valve VO** (Fig. 15) - used in combination of a gear pump, an accumulator and a check valve. When the pressure set at the unloading valve is reached, the valve loads the pump. The accumulator provides for holding the pressure in the circuit behind the check valve. Pressure valve VP works as the safety valve of the accumulator.
– **Switching** (Fig. 16) - used in combination of a gear pump, an accumulator, a check valve and prssure switch **TS**. When the pressure in the system reaches the pressure set at the pressure switch, the respective circuit switches off the electric motor. The accumulator provides for holding the pressure in the circuit behind the check valve. Pressure valve VP works as the safety valve of the accumulator.
– **Remote control with the pressure relief valve VT** (Fig. 17) - used only with piston pumps with pressure control. Pressure valve VP protects the circuits against pressure peaks.
– Pressure valve on the pump - used with piston pumps with pressure control. Pressure is adjusted by means of the screw which is fixed to the pump. Pressure valve VP protects the circuit against pressure peaks.

12 Oil filtration

Preferably the return filters with visual (Fig. 8) or electric (Fig. 9) clogging indication are used. These filters can also be used (after removing the cover) as the filling filters. They usually also comprise an integrated air breather.

Type of the filter	Type of the insert	Flow rate [L/min]	By-pass Δp [bar]	Absolute filtration [μm]
FR 043 - 166	V3 . 0510 - 56	25	2.5	10
FR 072 - 166	V3 . 0520 - 56	50	2.5	10
E 103 - 676	V3 . 0620 - 56	75	2.5	10

Fig. 8

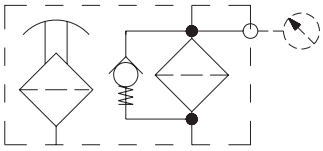

Fig. 9

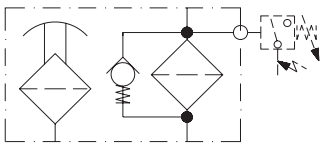

13 Size of the components

The hydraulic components are assembled into a hydraulic circuit by means of connecting or modular plates PD06 (catalogue HA 0006). These plates enable building of hydraulic systems as horizontal or vertical stacking assemblies representing compact system without connecting pipes or hoses. Up to 8 section can be connected in a horizontal stacking assembly. The installation dimension of the components size 06 correspond with ISO 4401- Ab-03-4 and DIN 24340-A6.
The working ports are provided with pipe threads as follows:

a) base block type ZB 06 x - xx
A, B - G3/8"
P, P1, T - G1/2"

b) in-line modular plates PD 06 xx - AL
A, B, P - G3/8"
T - G1/2"

14 Control voltage

of the electro-hydraulic components used must be determined with regard to the safety and protection of health.
On request, the components with the following Dc control voltages can be delivered: 12, 14, 21, 24, 42, 48, 60, 102 and 205 V. The avaible Ac voltages are 24, 115 and 230V / 50 (60)Hz.

15 Accumulators

The gas bar or membrane accumulators are being used (Fig. 10). The required capacity in L is to be determined.
Preferably the accumulators from those supliers are being used, who can ensure the international certification **(at least the certification from the German Testing Laboratory TÜV**).
When filling in the wrong again, please give the country in which your machine with our power pack is going to be used.
The accumulator is a pressure tank which must comply with the regulations regarding the safety of work. These regula- tions differ in the particular countries. The accumulator must be provided with the certificate of the respective country it is going to be used in!
Smaller accumulators (up to 4 L) are mounted directly onto the cover of the tank or onto a short block (max. with 2 section of control components above the base block). Larger larger accumulators are mounted only onto the tank cover. Together with an accumulator also the filling and checking equipment can be delivered (including the pressure gauge for filling the accumulator with nitrogen).
We recommend the use of the accumulator to be discussed with our technicians.

Fig. 10

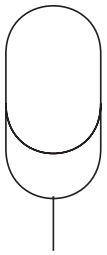

16 Accumulator block

The function of the safety block is provided by the base block (see Fig. 15 and 16).
The use of another block is to be consulted with us.

17, 18 Thermometer, thermostat, oil level transducer

These instruments can be mounted onto the tank cover. The **thermometer** (Fig. 11) and the **thermostat** (Fig. 12) provide for checking the oil temperature. The **oil level transducer** (Fig. 13).

Fig. 11

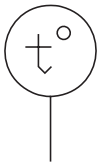

Fig. 12

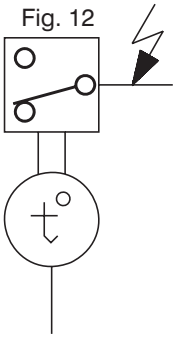

Fig. 13

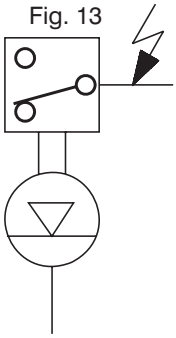

19 Electric equipment

Power packs delivered without electric equipment are standard. The electric circuit diagram of the electric motor is on the lower side of the cover of the motor terminal box. On request, the electric boxes (including terminals, circuits breakers etc.)can be delivered.

20 Hydraulic fluid

The hydraulick power packs are designed to operate with mineral oils of the power classes HM and HV according to he European specification CETOP RP 91 H and with the bio-degradable hydraulic fluids of the groups HTG and HE according to DIN-proposal.

21 Special equipment

Special requirements regarding the power pack equipment, such as oil cooling and heating, power pack covering etc., are to be consulted with our technicians.

Fig. 14

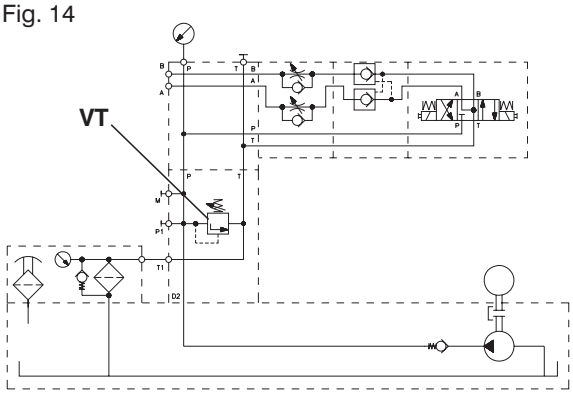

Power pack with gear pump - pressure in hydraulic system is controlled by pressure relief valve VT. (usable with tank capacities)

Fig. 15

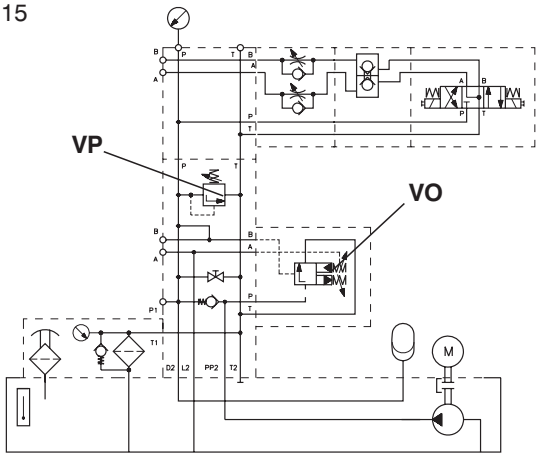

Power pack with gear pump - pressure in the system held by accumulator and check valve, pump pressure unloaded throgh unloading valve VO. Pressure relief valve VP works as the safety valve of the accumulator (for tank capacites from 40 up to 250 L and accumulators capacities from 2.5 up to 10 L).

Fig. 16

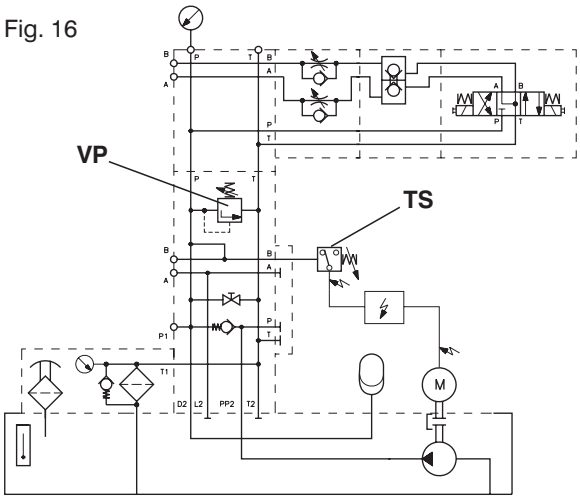

Power pack with gear pump and pressure switch TS controlling the switching-off of the electric motor. Pressure relief valve VP works as the safety valve of the accumulator (for tank capacities from 20 up to 60 L and accumulators capacites from 2.5 up to 10 L).

Fig. 17

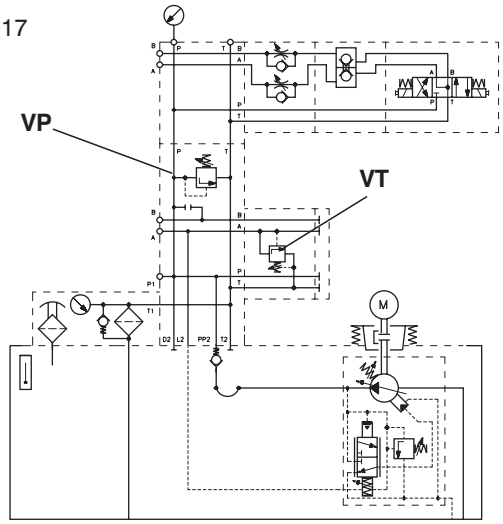

Power pack with piston pump with pressure control - remote pressure control throgh pressure relief valve VT. Pressure relief valve VP protects the system against pressure peaks (for tank capacities from 60 up to 250 L).

Fig. 10

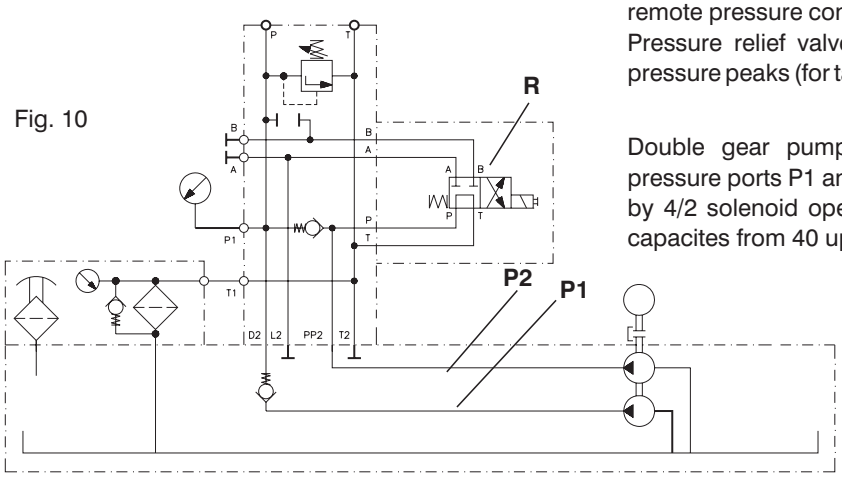

Double gear pump hydraulic power unit with two pressure ports P1 and P2. P2 pressure port is unloaded by 4/2 solenoid operated directional valve R (for tank capacites from 40 up to 250 L).

Caution!

- The packing foil is recyclable.
- The technical information regarding the product presented in this catalogue is for descriptive purposes only. It should not be construed in any case as a guaranteed representation of the product properties in the sense of the law.

ARGO-HYTOS s.r.o. CZ - 543 15 Vrchlabí
Tel.: +420-499-403111, Fax: +420-499-403421
E-mail: sales.cz@argo-hytos.com
www.argo-hytos.com

ARGO HYTOS	**Under Oil Power Pack** p_{max} up to 250 bar • Q_{max} up to 17 L/min	**SPA 01**
		HA 7111 12/2009 Replaces HA 7111 6/2008

- **Small compact power packs used in lifting platforms, ramps and other applications**
- **3 basic hydraulic circuits**
- **Low noise level**
- **High power ratio in relation to envelope dimensions**
- **Tank capacities from 7 to 30 L**
- **Possibility of building up an addition circuit in the form of horizontal stacking assembly of the size 04 or 06**

Functional Description

The under oil power packs are designed for applications which require low noise level as well as small envelope dimensions. They are supposed to work only occasionally, thus being suitable mainly for the use in lifting platforms, elevating tables and handling devices.
The electric motor (1) and the pump (2) are connected through a cross coupling. The electric connection of the electric motor with the power pack terminal board is realized through a tight bushing (4) which is fixed to the tank cover. The whole drive (electric motor + pump) is flexibly suspended by means of holder on the lower side of the tank cover.

Mounted on a lug, which is situated on the upper side of the tank cover, is block (5). The fluid under pressure delivered by the pump is led to this block by hose (6). The filtration of the fluid is provided by suction filter (7). The air is filtered by an air filter which is integrated into the filling plug (10). The filling plug serves also as the scale for measuring the oil level.
The block according to the hydraulic circuit S11 forms the base, on which the connecting plates of the horizontal stacking assembly (size 04 or 06) can be mounted.

PHASE - CONNECTIONS FOR CORRECT DIRECTION OF MOTOR ROTATION

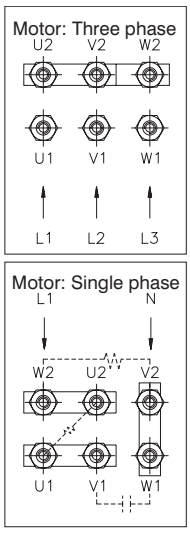

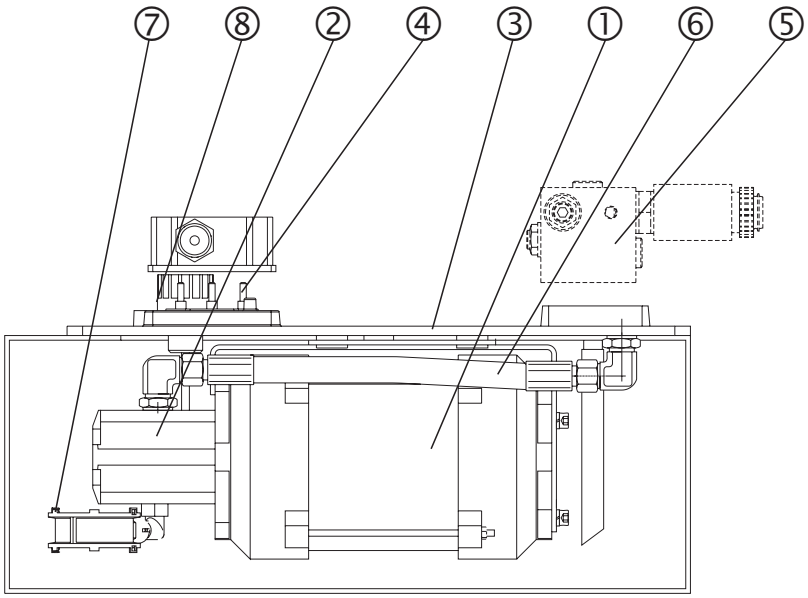

Ordering Code

SPA 01 - ☐ / ☐ . ☐ - ☐ - ☐ - ☐ ☐ / ☐

Under Oil Power Pack

Displacement of the pump

0,8 cm^3/Um.	**08**
1,2 cm^3/Um.	**02**
1,6 cm^3/Um.	**16**
2,1 cm^3/Um.	**21**
2,5 cm^3/Um.	**25**
3,3 cm^3/Um.	**33**
3,6 cm^3/Um.	**36**
4,4 cm^3/Um.	**44**
4,8 cm^3/Um.	**48**
5,8 cm^3/Um.	**58**
6,2 cm^3/Um.	**62**
7,9 cm^3/Um.	**79**

Code of the electric motor - see Tab. 1

Start-up module

- without start-up module	**0**
- wlth start-up module	**M**

Type of the block - see page 3

Code of the tank

7	7 L
10	10 L
20	20 L
30	30 L

Solenoid voltage

01200	12V DC
01400	14V DC
02100	21V DC
02400	24V DC
04200	42V DC
04800	48V DC
06000	60V DC
10200	102V DC
20500	205V DC
02450	24V / 50 (60)Hz
11550	115V / 50 (60)Hz
23050	230V / 50 (60)Hz

Nominal size of stacking assembly elements

0	Without stacking assembly
3	Size 03
4	Size 04
6	Size 06

Number of add-on units

0	Without stacking assembly
1	1Section
2	2 Sections
3	3 Sections
4	4 Sections
5	5 Sections

Technical Data

Flow rate	L/min	Tab. 1	
Working pressure	bar	Tab. 1	
Max. working/peak pressure	bar	Tab. 1	
Tank capacity	L	7, 10, 20, 30	
Type of the pump		external gear pump	
Power of the electric motor	kW	0,55 to 3	
Load factor of the electric motor	%	20	
Type of the electric motor		single phase	three phase
Voltage of the electric motor	V	230	400
Frequency	Hz	50	50
Enclosure type of the electric motor		IP 54	
Hydraulic fluid		Hydraulic oils of power classes (HL, HLP) to DIN 51524	
Viscosity range	mm^2/s	20 ... 100	
Maximum degree of fluid contamination		Class 21/18/15 to ISO 4406 (1999).	
Fluid temperature range	°C	-30 ... +80	
Ambient temperature max.	°C	+50	
Thread of the connecting ports P, T, M, (A, B)		G 1/4	
Working position		horizontal	

Tab. 1

Code of the electric motor			Code of the pump					
			08 P2..	12 P2..	16 P2..	21 P2..	25 P2..	33 P2..
$p_{max.}$** [bar]			250					
R.P.M.	400 V	kW	Q /p_n * [L/min] / [bar]					
1500	**13**	0.55		1.5/175	2.0/130	2.6/100	3.1/85	4.2/65
	14	0.75			1.9/190	2.5/145	3.0/120	3.9/90
	15	1.1			2.1/200	2.8/190	3.3/160	4.4/120
	16	1.5					3.2/200	4.2/170
	17	2.2						
	18	3.0						
3000	**30**	0.55	2.2/120	3.2/80	4.3/60	5.6/45	6.7/40	8.9/30
	31	0.75	2.2/160	3.2/110	4.3/80	5.6/65	6.7/55	8.9/40
	32	1.10	2.2/200	3.2/165	4.3/120	5.6/95	6.7/80	8.9/60
	33	1.50		3.2/200	4.3/165	5.6/130	6.7/110	8.9/80
	34	2.20			4.2/200	5.5/190	6.6/160	8.7/120
	35	3.00					6.4/200	8.5/170
Um./min	230 V	kW	Q /p_n * [l/min] / [bar]					
1500	**5**	0.55		1.6/165	2.1/125	2.7/100	3.2/80	4.3/60
	6	0.75		1.6/200	2.1/170	2.8/130	3.3/110	4.4/80
	7	1.10				2.8/190	3.3/160	4.4/120
	8	1.50					3.3/200	4.4/165

Code of the electric motor			36 P2..	44 P2..	48 P2..	58 P2..	62 P2..	79 P2..
$p_{max.}$** [bar]			250			200		160
R.P.M.	400 V	kW	Q /p_n * [L/min] / [bar]					
1500	**13**	0,55	4.5/60	5.5/50	6.0/45	7.3/35	7.8/35	9.9/25
	14	0,75	4.3/85	5.2/70	5.7/65	6.9/50	7.4/50	9.4/40
	15	1,10	4.8/110	5.8/90	6.3/85	7.7/70	8.2/65	10.4/50
	16	1,50	4.6/155	5.6/130	6.2/115	7.4/100	8.0/90	10.1/70
	17	2,20		5.0/200	5.5/190	6.6/160	7.1/150	9.0/120
	18	3,00			5.9/200	7.1/200	7.6/190	9.7/150
3000	**30**	0,55						
	31	0,75	9.7/35					
	32	1,10	9.7/55	11.8/45	12.9/40	15.6/35		
	33	1,50	9.7/75	11.8/60	12.9/55	15.6/45	16.7/40	
	34	2,20	9.5/110	11.6/90	12.7/85	15.3/70	16.4/65	20.9/50
	35	3,00	9.3/155	11.3/125	12.4/115	15.0/95	16.0/90	20.4/70
R.P.M.	230 V	kW	Q /p_n * [L/min] / [bar]					
1500	**5**	0,55	4.7/55	5.7/45	6.2/40	7.5/35	8.0/30	10.2/25
	6	0,75	4.8/75	5.9/60	6.4/55	7.7/45	8.3/45	10.5/35
	7	1,10	4.8/110	5.9/90	6.4/80	7.7/70	8.5/65	10.5/50
	8	1,50	4.8/150	5.9/120	6.4/110	7.7/95	8.5/85	10.5/70

* $p_{n.}$ - nominal pressure = the highest working pressure allowed without time restriction

** $p_{max.}$ - maximum pressure = maximum pressure allowed for a short time - max. 20s

Type of the Hydraulic Circuit

S11.0

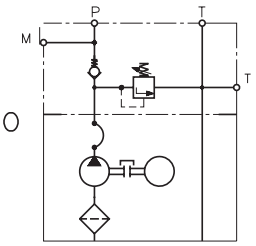

S14.N

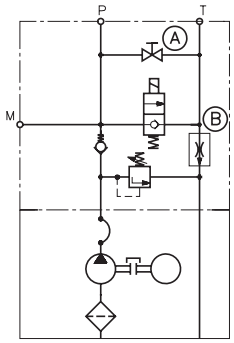

S24.N

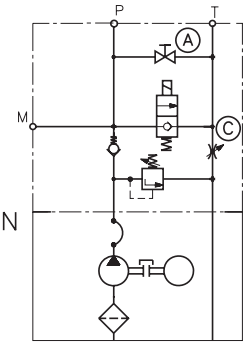

The hydraulic circuit S11.0 enables the power pack to be used as a simple pressure supply for general applications with the possibility to build up additional hydraulic circuits in the form of horizintal stacking assemblies of the size 04 or 06. Should the power pack be run for longer time periods, it is necessary to take the load factor of the electric motor into account.

The hydraulic circuit S14.N and S24.N enable the power pack to be used as pressure supply for lifting platforms and other devices, in which the mass of the system provides returning into the basic position. The shuf-off valve (A) enables emergency lowering of the device, should a disconnection of the supply voltage occur.

The hydraulic circuit S14.N comprises a flow control valve VSK2 (B) which is adjustable only in a certain range (see cataloge VSK2 - HA 5121). The valve is accessible after removing the block from the tank cover. If not otherwise required, a valve VSK2 is mounted into the block. The stabilized flow rate of this valve corresponds with the respective flow rate of the power pack (see Tab. 1).

The hydraulic circuit S24.N comprises a throttle valve VSV1-06 (C) without pressure compensation. This valve is accessible from outside of the block.

Valve Dimensions

Dimensions in millimeters

Steel tank

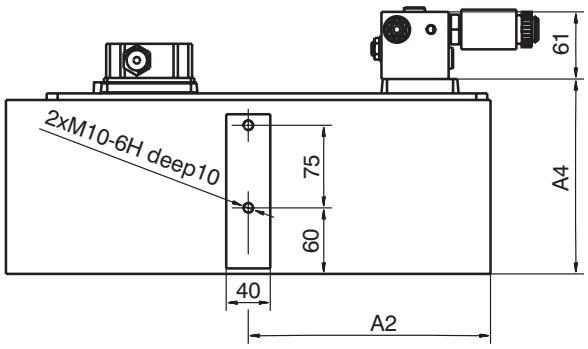

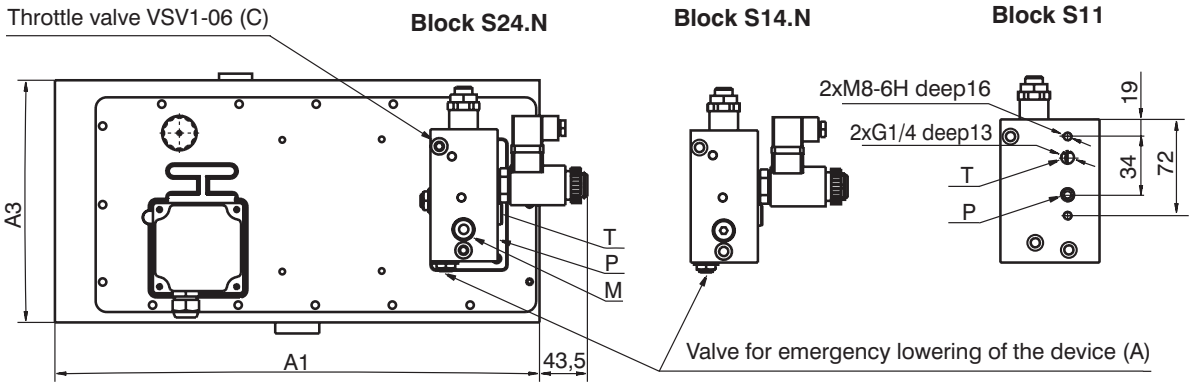

Example of horizontal stacking assembly

- possible only with hydraulic circuit S11.0

E - according to the elements used,
see datasheet 5021, 5023, 5051, 5093

F - Size 04=40 mm
Size 06=50 mm

G - Size 04=79 mm
Size 06=92 mm

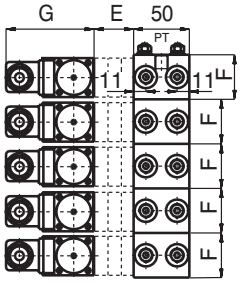

Code of the tank	Tank capacity in [L]	Working volume [L]	A1 [mm]	A2 [mm]	A3 [mm]	A4 [mm]
10 (steel)	10	6	440	220	220	175
20 (steel)	20	10	500	220	260	214
30 (steel)	30	20	500	220	260	294

Valve Dimensions

Dimensions in millimeters

Plastic tank

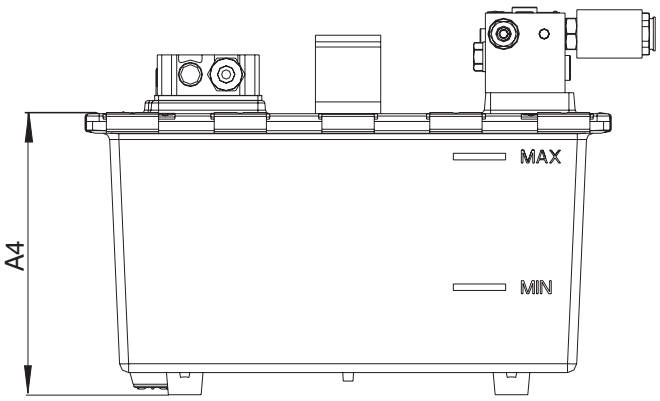

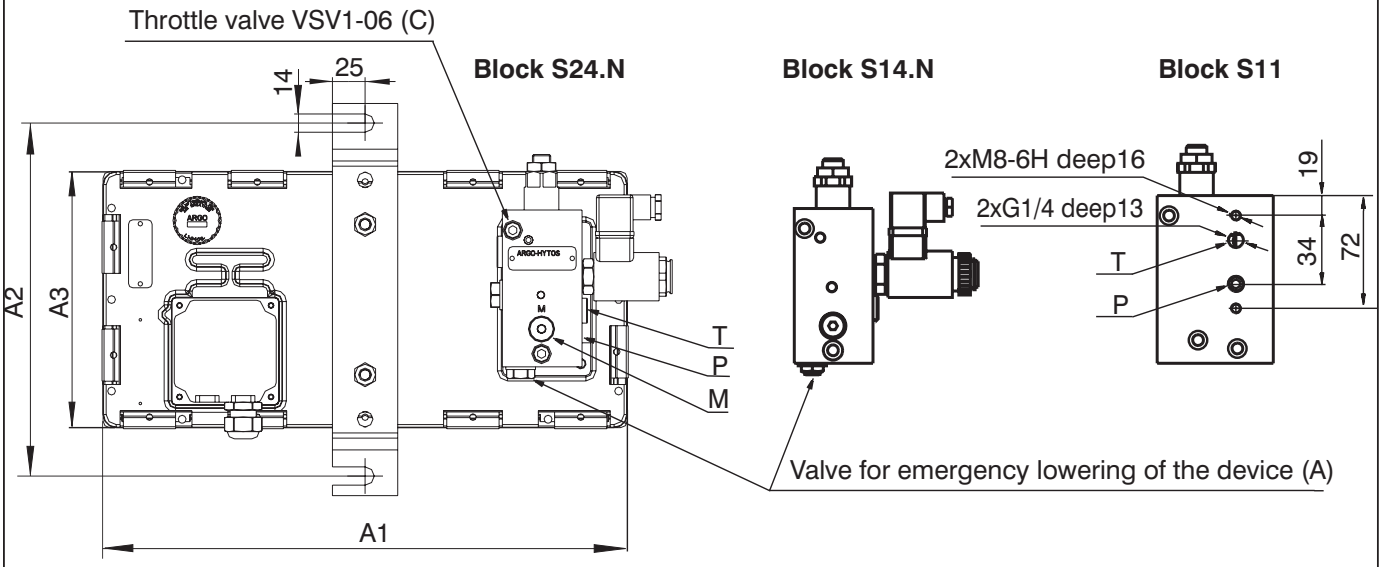

Code of the tank	Tank capacity in [L]	Working volume [L]	A1 [mm]	A2 [mm]	A3 [mm]	A4 [mm]
7 (plastic)	7	4	401	270	196	215

Caution!

- The packing foil is recyclable.
- The technical information regarding the product presented in this catalogue is for descriptive purposes only. It should not be construed in any case as a guaranteed representation of the product properties in the sense of the law.

ARGO-HYTOS s.r.o. CZ - 543 15 Vrchlabí
Tel.: +420-499-403111, Fax: +420-499-403421
E-mail: sales.cz@argo-hytos.com
www.argo-hytos.com

- **Compact power packs for the use in lifting platforms, elevating tables, ramps, presses, machine tools, mobile applications and others**
- **5 basic hydraulic circuits in the manifold**
- **Possibility of building up an additional circuit in the form of vertical or horizontal stacking assembly**
- **Tank capacities from 1.5 to 40L**
- **Low noise level**

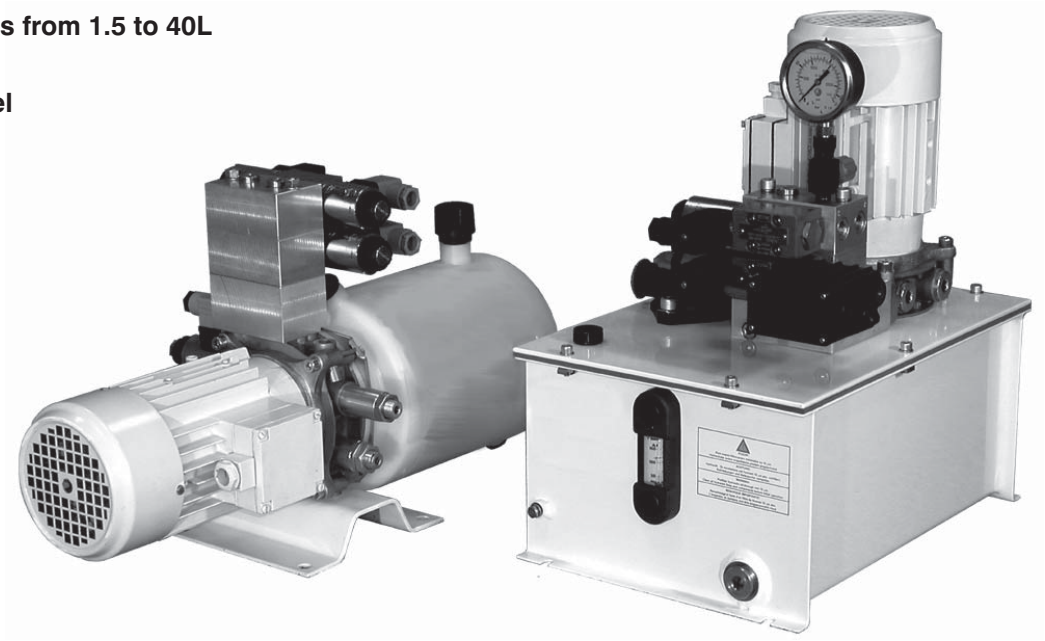

Functional Description

Compact hydraulic power packs are designed to fit into small envelope dimensions and can be used in lifting platforms, elevating tables, manipulators, small presses, machine tools and mobile applications.
Each power pack consists of an electric motor, a pump, a manifold and a tank. The aluminum body forms the base of the power pack, on which all the main components, including the hydraulic elements, are mounted. The function of the power packs is apparent from the respective hydraulic circuit diagrams. The desired combination of particular components and hydraulic elements can be defined by reference to the ordering code and the respective tables.
The hydraulic circuits can be accomplished in sizes 03, 04 and 06. The size 03 is in a form of sectional directional valves, and does not enable any extension by valves for controlling the flow rate and the pressure.
The mounting position of the power pack is horizontal or vertical - see the Power Pack Dimensions on pages 11 to 17. All ports have G 1/4 internal threads (the thread G3/8 is to agreed with manufacturer).
With the standard model the connecting ports A, B of the components of the vertical stacking assembly are oriented onto one side. Orientation of ports A, B each onto another side is to be agreed with the manufacturer.
The basic combinations of electric motors and pumps, as well as their code designations, are shown in tables 1, 2 and 3.

Information regarding the basic power pack surface treatment is on page 3.

Ordering Code

SMA 05-□ / □ . □ - □ - □ □ . □ - □ □ □ / □

Compact Power Pack

Pump displacement in cm³

Series X		Series P	
0.32	**03**	0.8	**08**
0.40	**04**	1.2	**12**
0.50	**05**	1.6	**16**
0.63	**06**	2.1	**21**
		2.5	**25**
		3.3	**33**
		3.6	**36**
		4.4	**44**
		4.8	**48**
		5.8	**58**
		6.2	**62**
		7.9	**79**

Code of the electric motor
(see tables 1, 2 and 3)

DC electric motor
with switch **R**

Single-phase electric motor
without starting module **0**
with starting module **M**

Thre-phase electric motor **0**

Type of hydraulic circuit
see table on pages 7 and 8

Tank code
see pages 11 - 16

Solenoid voltage

01200	12V DC
02400	24V DC
20500	205V DC
23050	230V / 50 (60)Hz

Nominal size of stacking assembly elements

0	Without stacking assembly
3	Size 03
4	Size 04
6	Size 06

(see page 12)

Number of add-on units

0	Without stacking assembly
1	1Section
2	2 Sections
3	3 Sections
4	4 Sections
5	5 Sections

(see page 12)

Type of stacking assembly

0	Without stacking assembly
A	Configuration A
B	Configuration B
C	Configuration C
D	Configuration D
E	Configuration E
F	Configuration F

(see page 12)

Foot bracket

0	without foot bracket
F	low foot bracket
K	high holder (for tank codes 40 - 45 only)

Type of filter used

0	without filter
S	suction filter
R*	return line filter without indication
E*	return line filter with el. indication
M*	return line filter with manometer

* for tank codes 56 - 60 only

Technical Data

Flow rate	L/min	to tables 1, 2 and 3		
Working pressure	bar	to tables 1, 2 and 3		
Tank capacity	L	1.5 - 40		
Type of pump		external gear pump, left-hand rotation		
Nominal pressure / max. pressure	bar	to tables 1, 2		
Power of electric motor		to tables 1, 2 and 3		
Type of electric motor		single phase	three phase	DC
Voltage of the electric motor	V	230	230/400	12/24
Frequency	Hz	50	50	-
Electric motor enclosure type / insulation class		IP 55/F	IP 55/F	IP 43/F
Voltage of directional valves	V	12DC, 24DC, 205DC, 230AC		
Hydraulic fluid		Hydraulic oils of power classes (HL, HLP) to DIN 51 524		
Oil Conductivity	pS/m	≥ 500 on 20° C		
Viscosity range	mm^2/s	20 ... 100		
Max. degree of fluid contamination		Class 21/18/15 to ISO 4406 (1999).		
Filtration (suction/return/)	µm	60/12		
Fluid temperature range	°C	0 ... +70		
Fluid temperature range for a short term 10 minute max.	°C	-20 minimum	+80 maximum	
Ambient temperature range	°C	-25 ... +50		
Thread of the connectiong ports P, T, A, B, M		G1/4 (A, B G3/8 - per request)		
Working position		horizontal, vertical		

Standard Surface Treatment

Model	Material used	Surface treatment
Cylindrical sheet tank	Sheet steel	Komaxit RAL 7030
Square sheet tank/cover	Sheet steel	Komaxit RAL 7030
Cylindrical plastic tank	BOREALIS ME 8131 (transparent)	Without surface treatment
Square plastic tank	MOSTEN (transparent)	Without surface treatment
DC electric motor		Zinc coated
AC electric motor		RAL 7030
Other components to manufacturer standard		

Other surface treatment - is to agreed with manufacturer.

Tab. 1a

Code of the three-phase motors			Code of the pump															
			03 X-...		**04** X-...		**05** X-...		**06** X-...		**08** P2-...		**12** P2-...		**16** P2-...		**21** P2-...	
$p_{max.}$ ** [bar]			**240**								**250**							
400V	n[1/min]	p[kW]	Q/$p_{n.}$* [L/min] / [bar]															
9	1320	0,12	0,3	160	0,4	130	0,6	100	0,7	80	0,9	65	1,4	40	1,8	30		
10	1320	0,18	0,3	240	0,4	190	0,6	150	0,7	120	0,9	95	1,4	60	1,8	45	2,5	35
11	1395	0,25			0,5	200	0,6	200	0,8	160	0,9	125	1,4	80	1,9	60	2,6	45
12	1400	0,37							0,8	200	0,9	180	1,4	120	1,9	90	2,6	70
13	1390	0,55									0,9	200	1,4	180	1,9	135	2,6	105
14	1400	0,75											1,4	200	1,9	180	2,6	140
15	1410	1,10													2,0	200	2,6	200
16	1410	1,50																
17	1425	2,20																
18	1425	3,00																
27	2745	0,18	0,7	115	0,9	90	1,2	75	1,5	60	1,9	45	2,8	30				
28	2740	0,25	0,7	160	0,9	130	1,2	100	1,5	80	1,9	65	2,8	40	3,8	30		
29	2790	0,37	0,7	200	0,9	185	1,2	150	1,5	115	1,9	90	2,9	60	3,9	45	5,2	35
30	2820	0,55					1,2	200	1,5	175	1,9	135	2,9	90	3,9	65	5,3	50
31	2850	0,75							1,5	200	1,9	180	2,9	120	4,0	90	5,3	70
32	2850	1,10									1,9	200	2,9	175	4,0	130	5,3	100
33	2855	1,50											2,9	200	4,0	175	5,3	135
34	2855	2,20													4,0	200	5,3	200
35	2860	3,00																

Tab. 1b

Code of the three-phase motors			Code of the pump															
			25 P2-...		**33** P2-...		**36** P2-...		**44** P2-...		**48** P2-...		**58** P2-...		**62** P2-...		**79** P2-...	
$p_{max.}$ ** [bar]			**250**										**200**				**160**	
400V	n[1/min]	p[kW]	Q/$p_{n.}$* [L/min] / [bar]															
9	1320	0,12																
10	1320	0,18	3,0	30														
11	1395	0,25	3,2	40	4,2	30	4,6	25										
12	1400	0,37	3,2	55	4,2	45	4,6	40	5,6	35	6,1	30	7,4	25				
13	1390	0,55	3,2	85	4,2	65	4,6	60	5,6	50	6,1	45	7,4	35	7,9	35	10,1	25
14	1400	0,75	3,2	115	4,3	90	4,6	80	5,7	65	6,2	60	7,5	50	8,0	45	10,2	35
15	1410	1,10	3,2	165	4,3	130	4,7	115	5,7	95	6,2	90	7,5	75	8,0	70	10,2	55
16	1410	1,50	3,2	200	4,3	175	4,7	160	5,7	130	6,2	120	7,5	100	8,0	95	10,2	75
17	1425	2,20			4,3	200	4,7	200	5,8	190	6,3	175	7,6	145	8,1	135	10,4	105
18	1425	3,00									6,3	200	7,6	195	8,1	185	10,4	145
27	2745	0,18																
28	2740	0,25																
29	2790	0,37	6,3	30														
30	2820	0,55	6,4	40	8,6	30	9,3	30	114	25								
31	2850	0,75	6,5	55	8,7	45	9,4	40	11,5	30	12,6	30	15,2	25				
32	2850	1,10	6,5	80	8,7	65	9,4	60	11,5	45	12,6	45	15,2	35	16,3	35		
33	2855	1,50	6,5	110	8,7	85	9,5	80	11,6	65	12,6	60	15,2	50	16,3	45		
34	2855	2,20	6,5	165	8,7	125	9,5	115	11,6	95	12,6	85	15,2	70	16,3	65		
35	2860	3,00	6,5	200	8,7	170	9,5	160	11,6	130	12,6	120	15,3	100	16,3	90		

* $p_{n.}$ - nominal pressure = the highest working pressure allowed without time restriction
** $p_{max.}$ - maximum pressure = maximum pressure allowed for a short time - max. 20s

Tab. 2a

Code of the single-phase motors			Code of the pump															
			03 X-...		**04** X-...		**05** X-...		**06** X-...		**08** P2-...		**12** P2-...		**16** P2-...		**21** P2-...	
$p_{max.}$ ** [bar]			**240**								**250**							
230V	n[1/min]	p[kW]	Q/$p_{n.}$* [L/min] / [bar]															
1	1300	0,12	0,3	160	0,4	125	0,6	100	0,7	80	0,9	65	1,3	40	1,8	30		
2	1350	0,18	0,4	200	0,4	185	0,6	150	0,7	115	0,9	90	1,4	60	1,9	45	2,5	35
3	1390	0,25			0,5	250	0,6	200	0,8	160	0,9	125	1,4	80	1,9	60	2,6	45
4	1410	0,37							0,8	200	0,9	180	1,4	120	1,9	90	2,6	70
5	1370	0,55									0,9	200	1,4	180	1,9	135	2,6	105
6	1410	0,75											1,5	200	2,0	180	2,6	140
7	1410	1,10															2,6	200
8	1410	1,50																
19	2840	0,18	0,7	110	0,9	90	1,2	70	1,5	55	1,9	45	2,9	30				
20	2840	0,25	0,7	155	0,9	125	1,2	100	1,5	80	1,9	60	2,9	40	3,9	30		
21	2780	0,37	0,7	200	0,9	185	1,2	150	1,5	120	1,9	90	2,9	60	3,9	45	5,2	35
22	2820	0,55					1,2	200	1,5	175	1,9	135	2,9	90	3,9	65	5,3	50
23	2820	0,75							1,5	200	1,9	185	2,9	120	3,9	90	5,3	70
24	2845	1,10									1,9	200	2,9	175	4,0	130	5,3	100
25	2855	1,50											2,9	200	4,0	175	5,3	135
26	2810	2,20															5,3	200

Tab. 2b

Code of the single-phase motors			Code of the pump															
			25 P2-...		**33** P2-...		**36** P2-...		**44** P2-...		**48** P2-...		**58** P2-...		**62** P2-...		**79** P2-...	
$p_{max.}$ ** [bar]			**250**										**200**				**160**	
230V	n[1/min]	p[kW]	Q/$p_{n.}$* [L/min] / [bar]															
1	1300	0,12																
2	1350	0,18	3,1	30														
3	1390	0,25	3,1	40	4,2	30	4,6	30										
4	1410	0,37	3,1	55	4,2	45	4,6	40	5,6	30	6,1	30	7,4	25				
5	1370	0,55	3,1	85	4,2	65	4,6	60	5,6	50	6,1	45	7,4	35	7,8	35	10,0	30
6	1410	0,75	3,2	115	4,3	85	4,7	80	5,7	65	6,2	60	7,5	50	8,0	45	10,2	35
7	1410	1,10	3,2	165	4,3	130	4,7	115	5,7	95	6,2	90	7,5	75	8,0	70	10,2	55
8	1410	1,50	3,2	200	4,3	175	4,7	160	5,7	130	6,2	120	7,5	100	8,0	95	10,2	75
19	2840	0,18																
20	2840	0,25																
21	2780	0,37	6,3	30														
22	2820	0,55	6,4	40	8,6	30	9,3	30										
23	2820	0,75	6,4	55	8,6	45	9,3	40	11,4	35	12,5	30	15,0	25				
24	2845	1,10	6,5	85	8,6	65	9,4	60	11,5	50	12,5	45	15,1	35	16,2	35		
25	2855	1,50	6,5	110	8,6	85	9,4	80	11,5	65	12,5	60	15,1	50	16,2	45		
26	2810	2,20	6,5	165	8,6	130	9,4	120	11,5	95	12,5	90	15,1	75	16,1	70		

Attention! Pay special attention to the start-up torque of single-phase motors. Use the start-up module during start-up under pressure.

* $p_{n.}$ - nominal pressure = the highest working pressure allowed without time restriction

** $p_{max.}$ - maximum pressure = maximum pressure allowed for a short time - max. 20s

Tab. 3

12V	24V	kW	**Code of the pump 40 - 63**
Code of the electric motor			**Q** [L/min] /**p** [bar]
40	/	0,35	See characteristics on page 6
/	**43**	0,4	
45	/	0,8	
/	**46**	1,2	
51	/	1,5	
/	**52**	2,0	
/	**63**	3,0	

Attention! The DC motors must be loaded, so as to reduce the revolutions! Do not run the motors without pressure loading!

Characteristics

Code 40

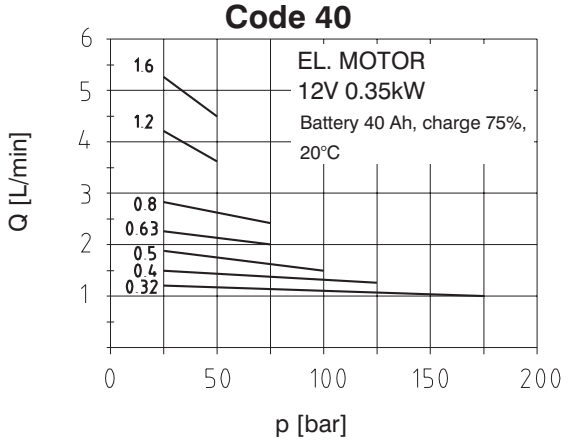

Code 43

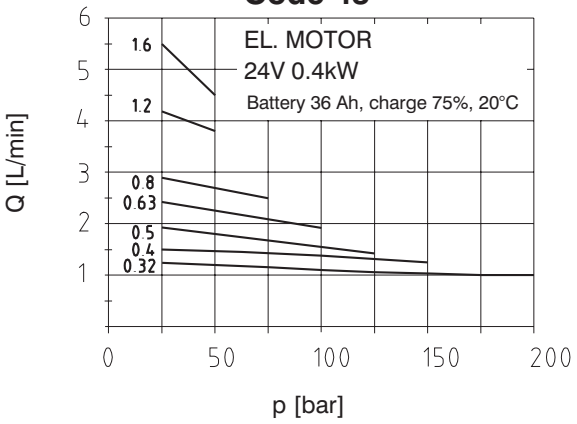

Code 45

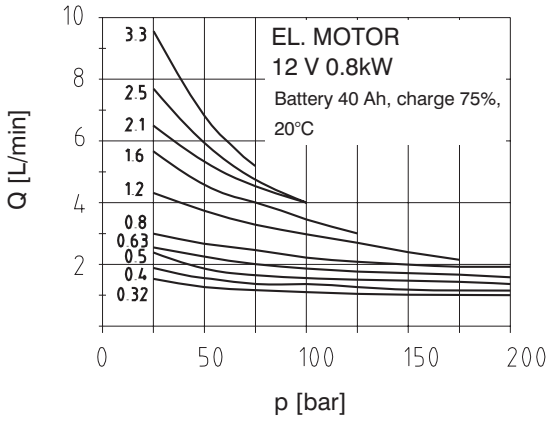

Code 46

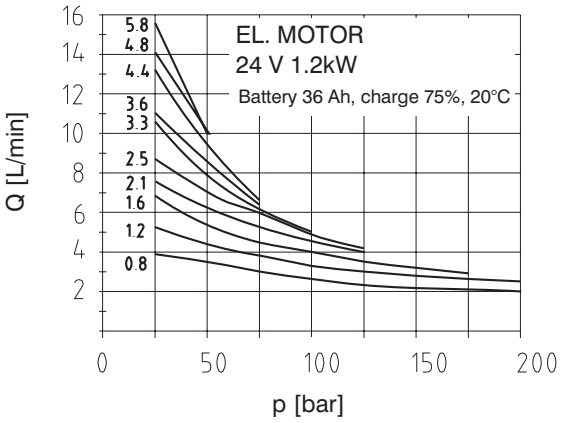

Code 51

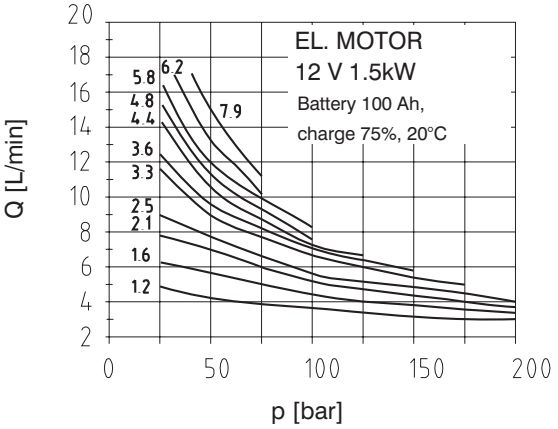

Code 52

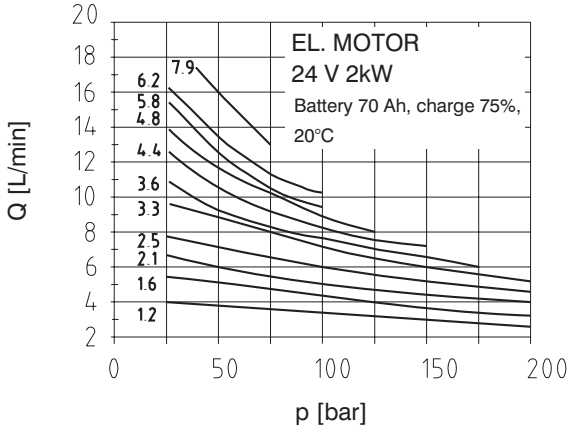

Code 63

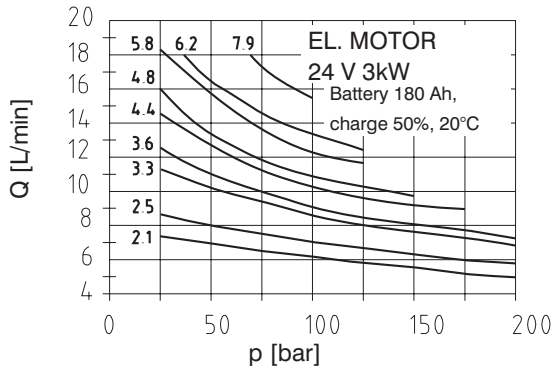

Basic Hydraulic Circuit Diagrams

A

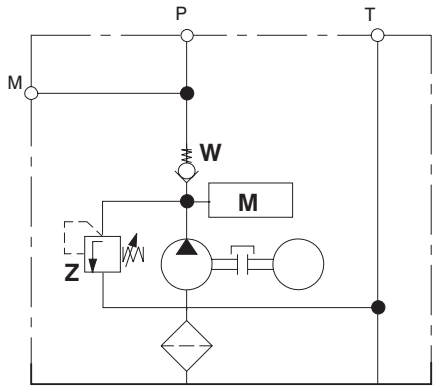

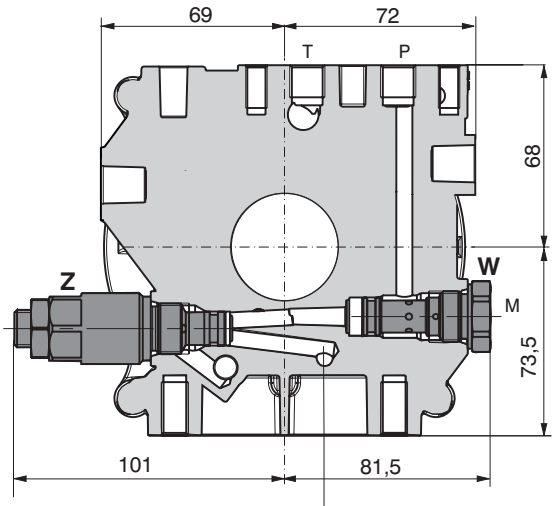

Mounted on the side of the pump via thread G1/4

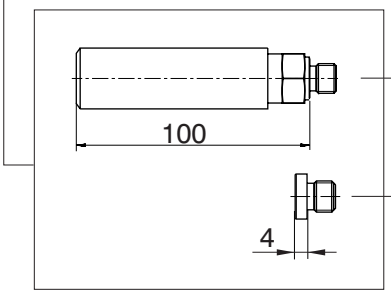

	Type	Ordering number	Symbols
M	Starting module	736-2801	
0	Plug VSTI G1/4	336 350 000 014	

Exact position of the starting module or plug ... ref. page 18.

B

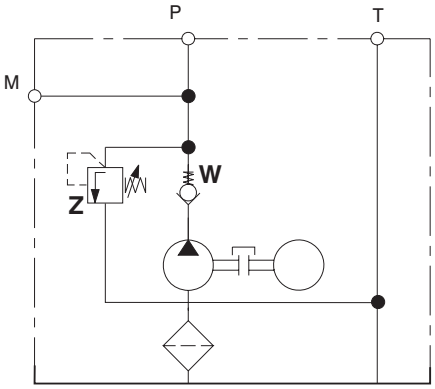

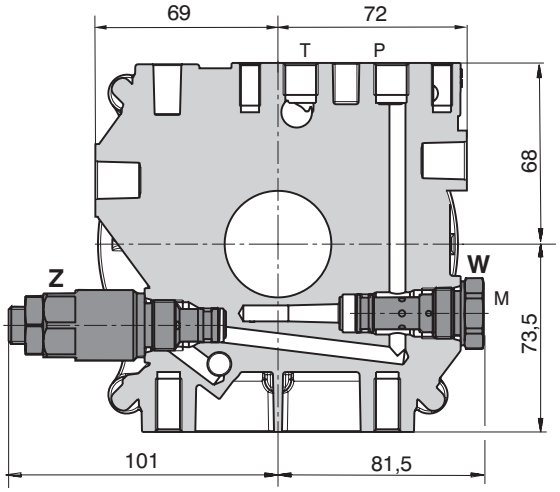

Basic Hydraulic Circuit Diagrams

CXY

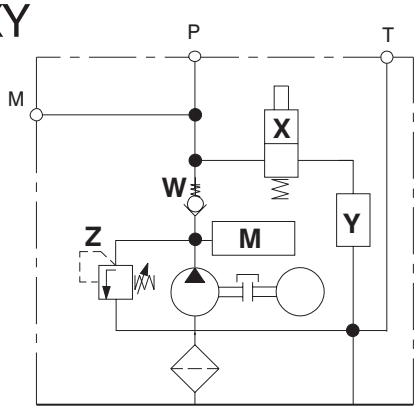

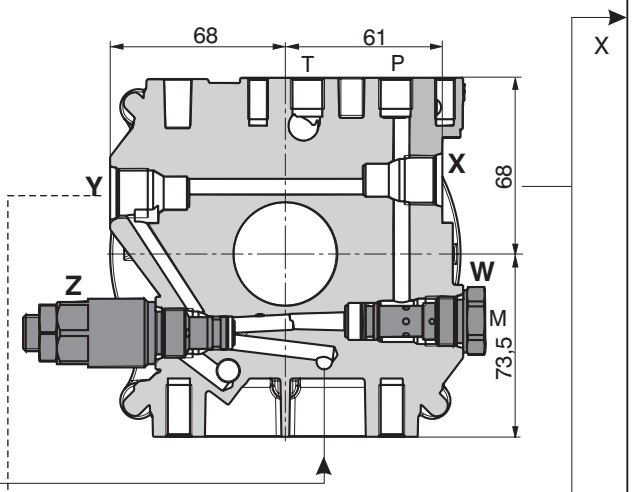

Mounted on the side of the pump via thread G1/4

DXY

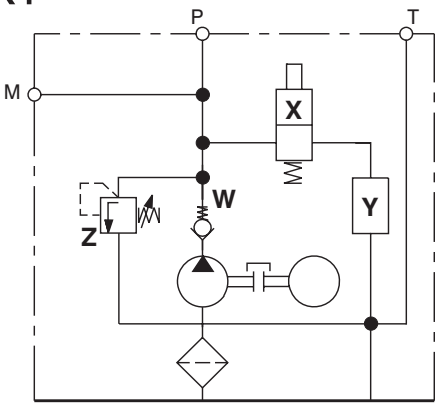

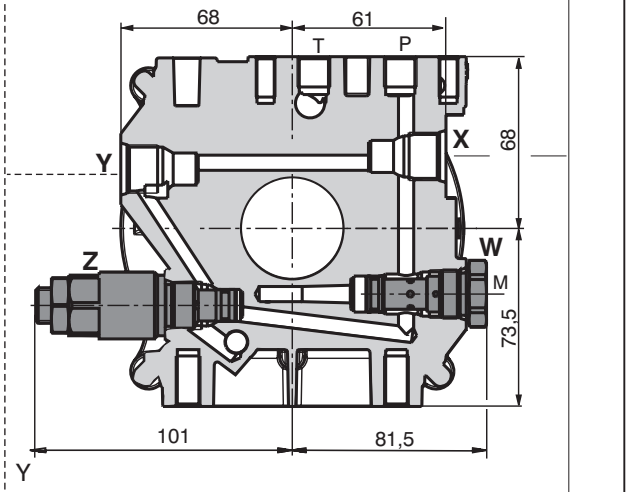

EXY

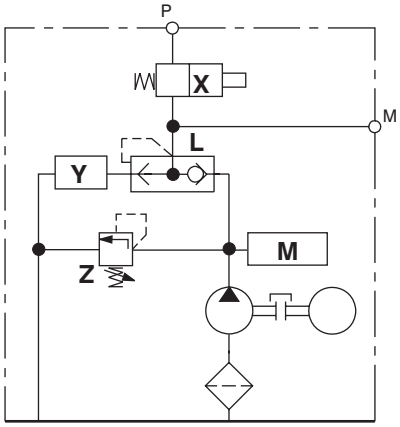

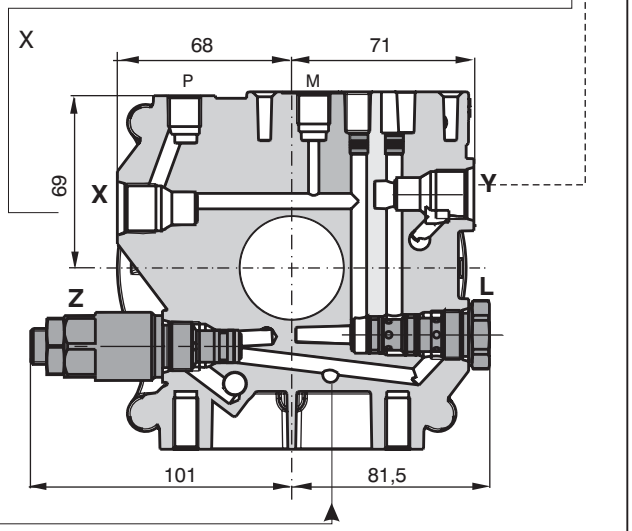

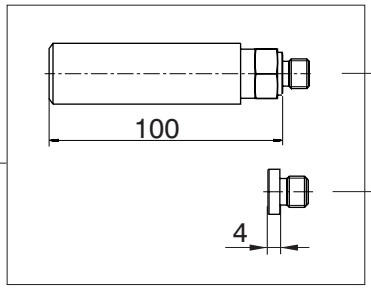

	Type	Ordering number	Symbols
M	Starting module	736-2801	
0	Plug VSTI G1/4	336 350 000 014	

Exact position of the starting module or plug ... ref. page 18.

X

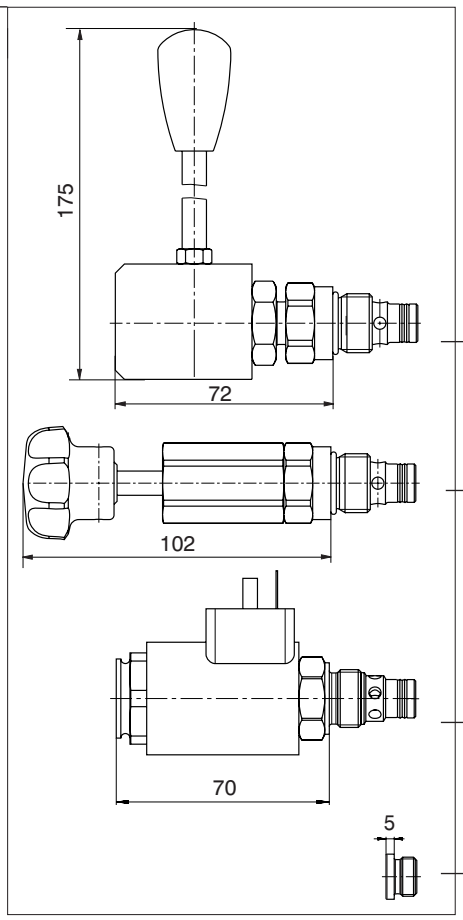

X	Type of the seat valve	Functional symbol
5	SD1M1-A2/SL3 + lever with micro switch	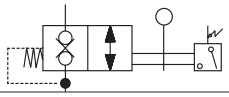
4	SD1M1-A2/SL2 +lever without micro switch	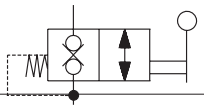
3	SD1M-A2/SL1	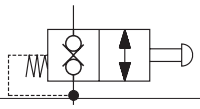
2	SD3E-A2/H2O2	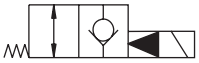
1	SD3E-A2/H2L2	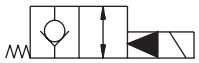
0	336312341602	

Y

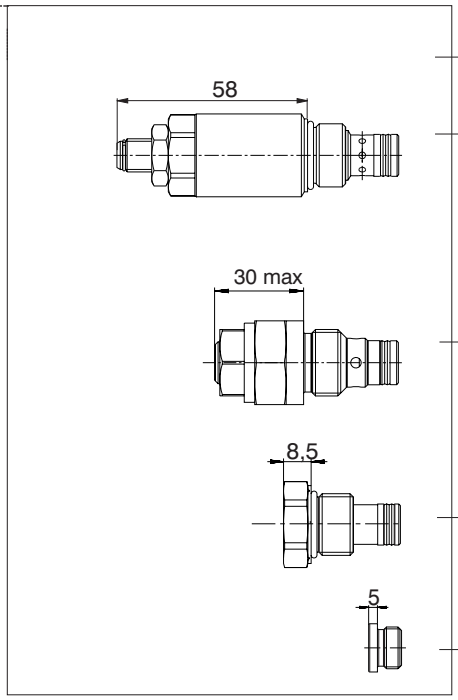

Y	Type of the throttle valve	Functional symbol
	Manually controlled pump – upon request	
2	**SF22A-A2/H***	
	* The size of the throttle valve corresponds regularly with the flow rate Q of the pump used. Other throttle valve size on request of the customer.	
1	VSV1-UNF	
0	531-0602 pro X = 0	
0	336 312 341 602 pro X ≠ 0	

Z	**Directly Operated Pressure Relief Valves**	SR1A-A2/S	- Pressure range refer to data sheet HA 5063	
W	**Check Valves**	SC1F-A3/C		
L	**Logical Valves**	SSH1H-A3/C		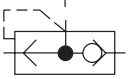

Table of Dimensions

Single-phase and three-phase motors

Code of EM	Power [kW]	Voltage [V]	Current [A]**	Speed [1/min]**	B max [mm]	C max [mm]	∅D [mm]
1	0,12	230	1,30	1300	248	139	120
2	0,18	230	1,70	1350	248	139	120
3	0,25	230	2,13	1390	261	151	141
4	0,37	230	2,82	1410	261	151	141
5	0,55	230	5,00	1370	305	157	159
6	0,75	230	6,00	1410	305	157	159
7	1,10	230	8,20	1410	314	165	174
8	1,50	230	10,00	1410	339	165	174
9	0,12	400	0,65	1320	248	101	120
10	0,18	400	0,78	1320	248	101	120
11	0,25	400	0,83	1395	261	105	140
12	0,37	400	1,14	1400	261	105	140
13	0,55	400	1,51	1390	305	127	159
14	0,75	400	1,98	1400	305	127	159
15	1,10	400	2,78	1410	314	139	174
16	1,50	400	3,61	1410	339	139	174
17	2,20	400	5,07	1425	390	148	196
18	3,00	400	6,66	1425	390	148	196
19	0,18	230	1,52	2840	248	139	120
20	0,25	230	1,90	2840	248	139	120
21	0,37	230	2,90	2780	261	151	141
22	0,55	230	4,10	2820	261	151	141
23	0,75	230	5,45	2820	305	157	159
24	1,10	230	8,00	2845	305	157	159
25	1,50	230	11,50	2855	314	165	174
26	2,20	230	14,80	2810	339	165	174
27	0,18	400	0,56	2745	248	101	120
28	0,25	400	0,73	2740	248	105	120
29	0,37	400	1,00	2790	261	105	140
30	0,55	400	1,40	2820	261	105	140
31	0,75	400	1,80	2850	305	127	159
32	1,10	400	2,54	2850	305	127	159
33	1,50	400	3,50	2855	314	139	174
34	2,20	400	4,95	2855	339	139	174
35	3,00	400	6,35	2860	390	148	196

DC electric motor

Code of EM	Power [kW]	Voltage [V]	Current [A]**	Speed [1/min]**	Load factor **		B [mm]	C [mm]	D [mm]
40	0,35	12	40	3200	S2 - 10 min	S3 - 35% ED	143	96	76
43	0,40	24	25	3300	S2 - 6 min	S3 - 25% ED	143	96	76
45	0,80	12	135	2700	S2 - 1 min	S3 - 4% ED	165	95	80
46	1,20	24	90	3200	S2 - 1min	S3 - 3% ED	165	95	80
51	1,50	12	220	2400	S2 - 2 min	S3 - 7% ED	179	100	117
52	2,00	24	140	2100	S2 - 3 min	S3 - 8% ED	179	100	117
63	3,00	24	200	2200	S2 - 4.5 min	S3 - 10% ED	336	121	162

** Valid for rated power values.

Load factor

Duty S1 (min) – Intended for use under continuous duty cycle conditions (load factor S1) for various press-related applications and those which involve dynamic strokes, with recommendation to consult the conditions of use with manufacturer.

Duty S2 (min) - short-time operation

The motor operates with constant load for a definite time, in order to reach the maximum permissible temperature Tmax., later on an idle period long enough to reach the equality between motor temperature and ambient temperature.

Duty S3 (%ED) - periodic operation

The operation of the motor is a continuous sequence of identical cycle, each compound from a load period and an idle period. During the load period the motor can be reach the maximum permissible temperature. S3 value shows, in percentage, the length of the load period respect to the total cycle-load period more idle period. The S3 curve quoted in the performance specifications is referred to a lengh′ts cycle of 10 minutes.

Valve Dimensions

Dimensions in millimeters

Power pack with cylindrical sheet tank, single-phase and three-phase motors

- mounting position horizontal

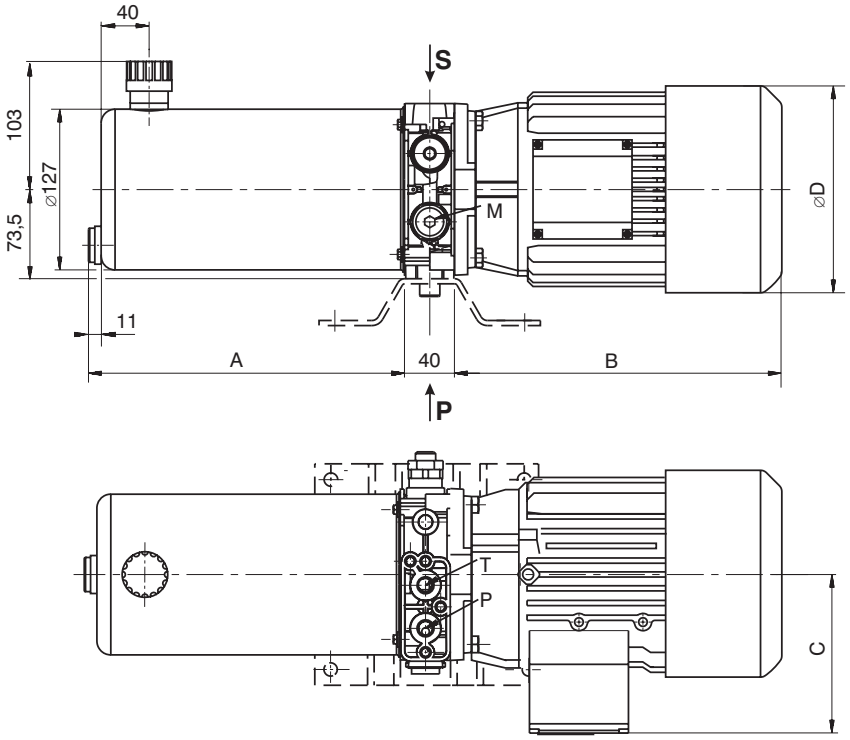

Connecting Block

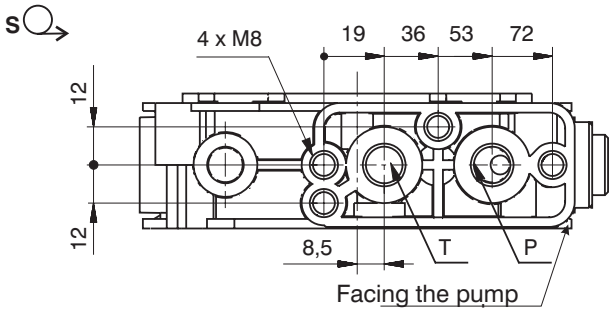

Connection holder

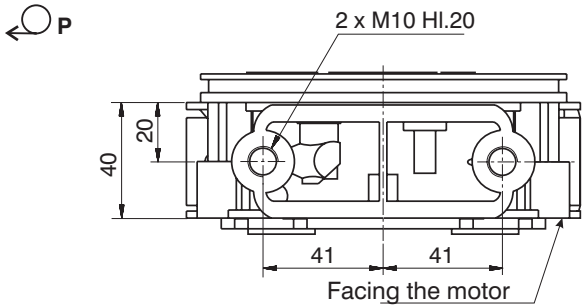

Dimensions B, C, ∅D see Table of Dimensions page 10

Code of the tank	Capacity in [L]	Working volume [L]	A
10 (sheet)	1.5	0.8	151
11 (sheet)	2	1.1	251
12 (sheet)	3	1.6	331
13 (sheet)	4	2	411

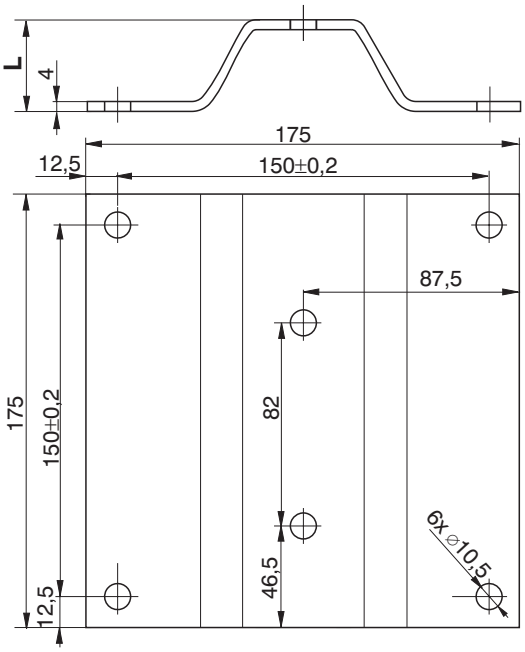

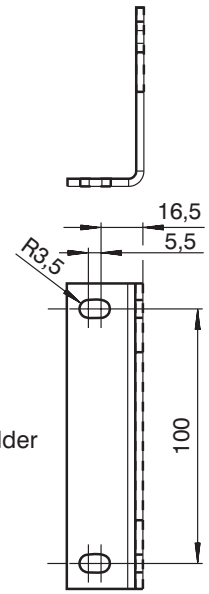

TANK SUPPORT
code 64-70 with holder of Power Pack Configuration F

Power pack foot bracket	
Typ	Dimensions **L** [mm]
F	37
K	62

Valve Dimensions

Dimensions in millimeters

Lay - out of the Block power pack with cylindrical sheet tank

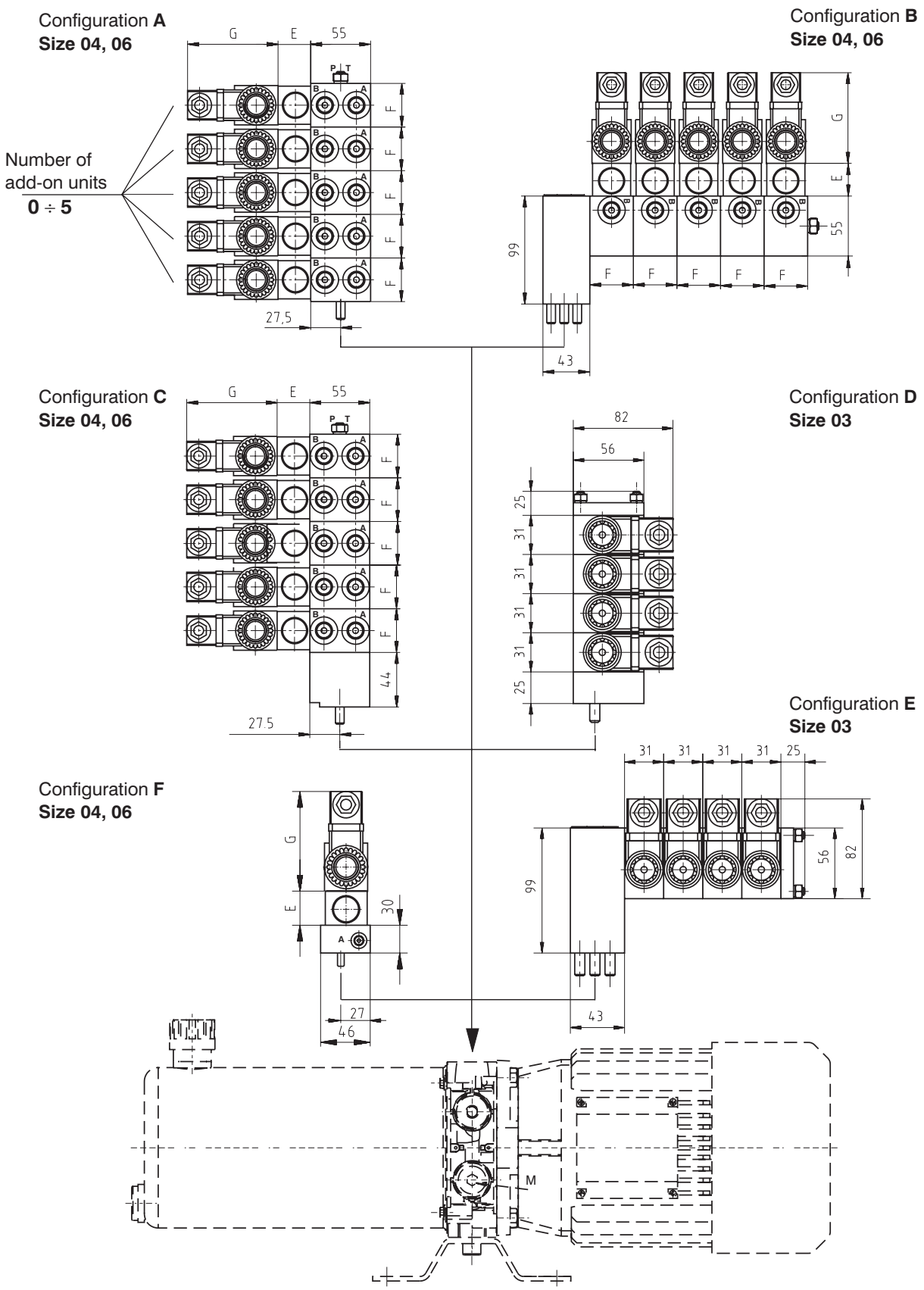

Thread of the connecting ports A, B, P, T, M - G1/4 (A, B - G3/8)

Dimension	E [mm]						F[mm]	G[mm]
	Pressure switch	Reducing valves	Pressure relief valves	Pilot operated check valves cartridge	Check Valves	Flow Valves		
Size 04	35	30	35	30	30	30	40	79
Size 06	43	45	40	40	31.4	40	50	92

Valve Dimensions

Dimensions in millimeters

Power pack with cylindrical sheet tank - mounting position horizontal

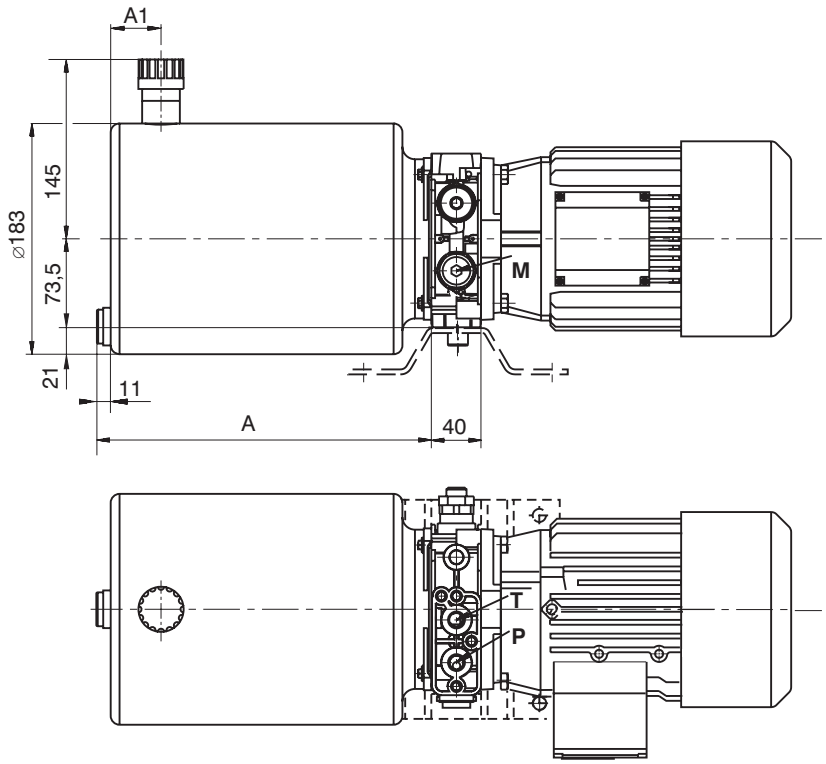

Code of the tank	Code of the tank	Working volume [L]	A	A1
20 (sheet)	6	3,7	269	40
22 (sheet)	8	4,9	349	155
24 (sheet)	10	6,1	429	195

Power pack with cylindrical sheet tank - mounting position vertical

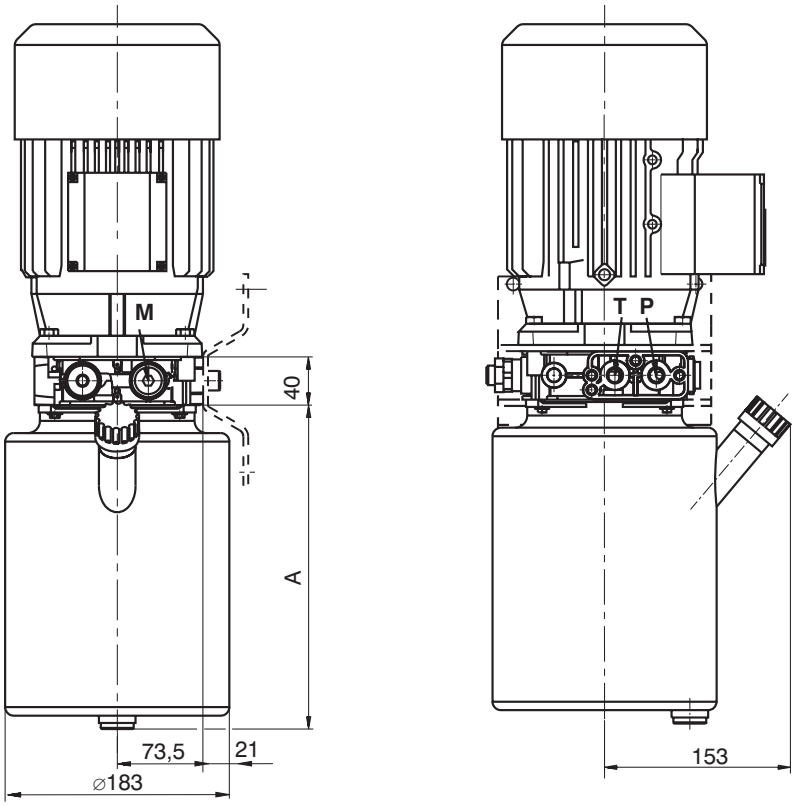

Code of the tank	Code of the tank	Working volume [L]	A
51(sheet)	6	3,4	269
53 (sheet)	8	5,4	349
55 (sheet)	10	7,4	429

Valve Dimensions

Dimensions in millimeters

Power pack with cylindrical plastic tank - mounting position horizontal

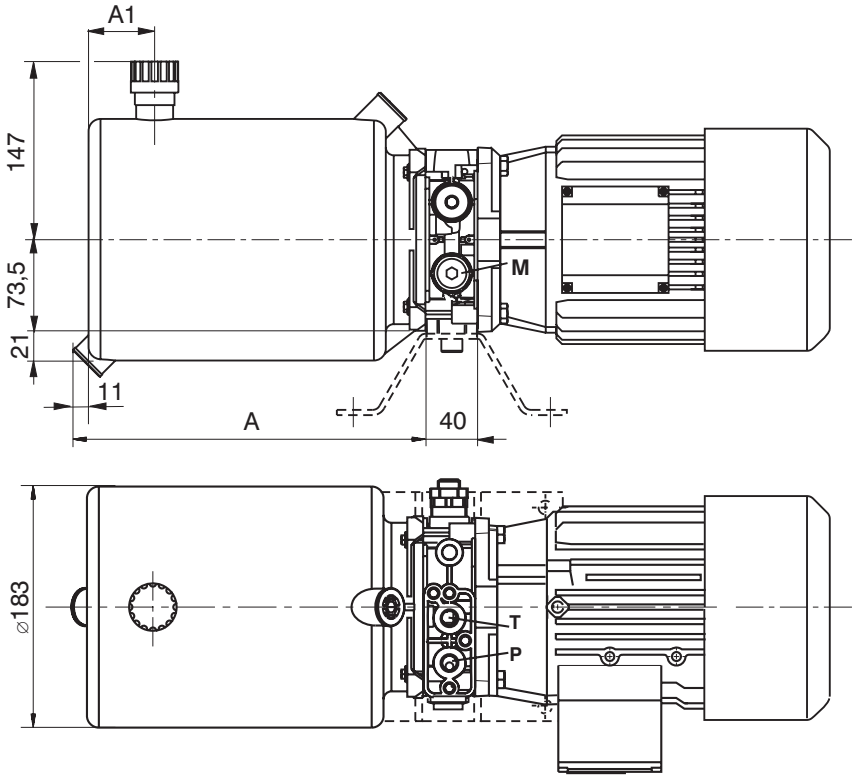

Code of the tank	Capacity in [L]	Working volume [L]	A	A1
40 (plastic)	6	3,7	280	61
42 (plastic)	8	4,9	360	121
44 (plastic)	10	6,1	440	201

Power pack with cylindrical plastic tank - mounting position vertical

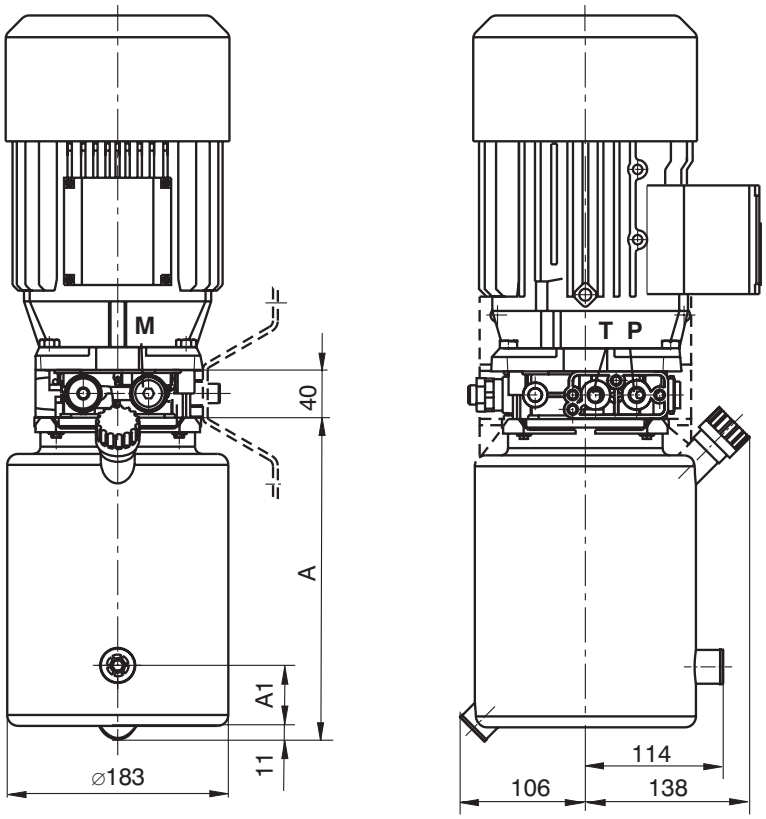

Code of the tank	Capacity in [L]	Working volume [L]	A	A1
41 (plastic)	6	3,7	280	61
43 (plastic)	8	4,9	360	121
45 (plastic)	10	6,1	440	201

Valve Dimensions

Dimensions in millimetes

Power pack with square plastic tank - mounting position horizontal

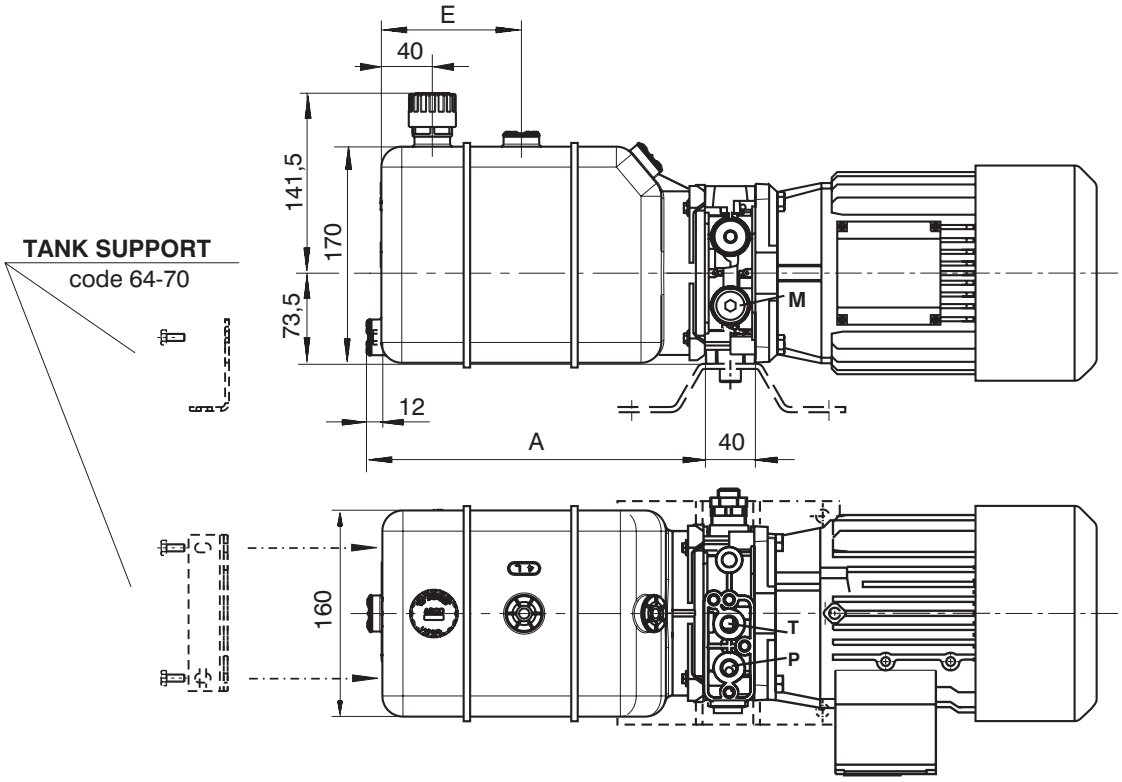

Code of the tank	Capacity in [L]	Working volume [L]	A	E
62 (Plastic)	2	1.7	178	-
64 (Plastic)	4	3.0	270	120
66 (Plastic)	6	4.5	359	165
68 (Plastic)	8	6.0	449	208
70 (Plastic)	10	7.5	543	208

Power pack with square plastic tank - mounting position vertikal

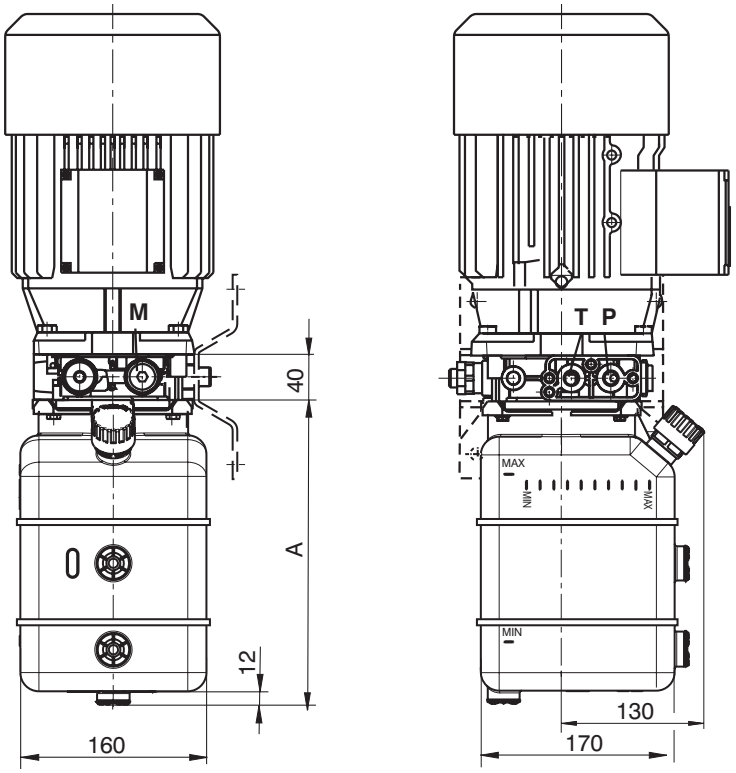

Code of the tank	Capacity in [L]	Working volume [L]	A
61 (Plastic)	2	1,3	178
63 (Plastic)	4	3,5	270
65 (Plastic)	6	5,5	359
67 (Plastic)	8	7,5	449
69 (Plastic)	10	9,5	543

Valve Dimensions

Dimensions in millimetes

Power pack with square sheet tank - single-phase and three-phase motors with return line filter

Configuration B, E

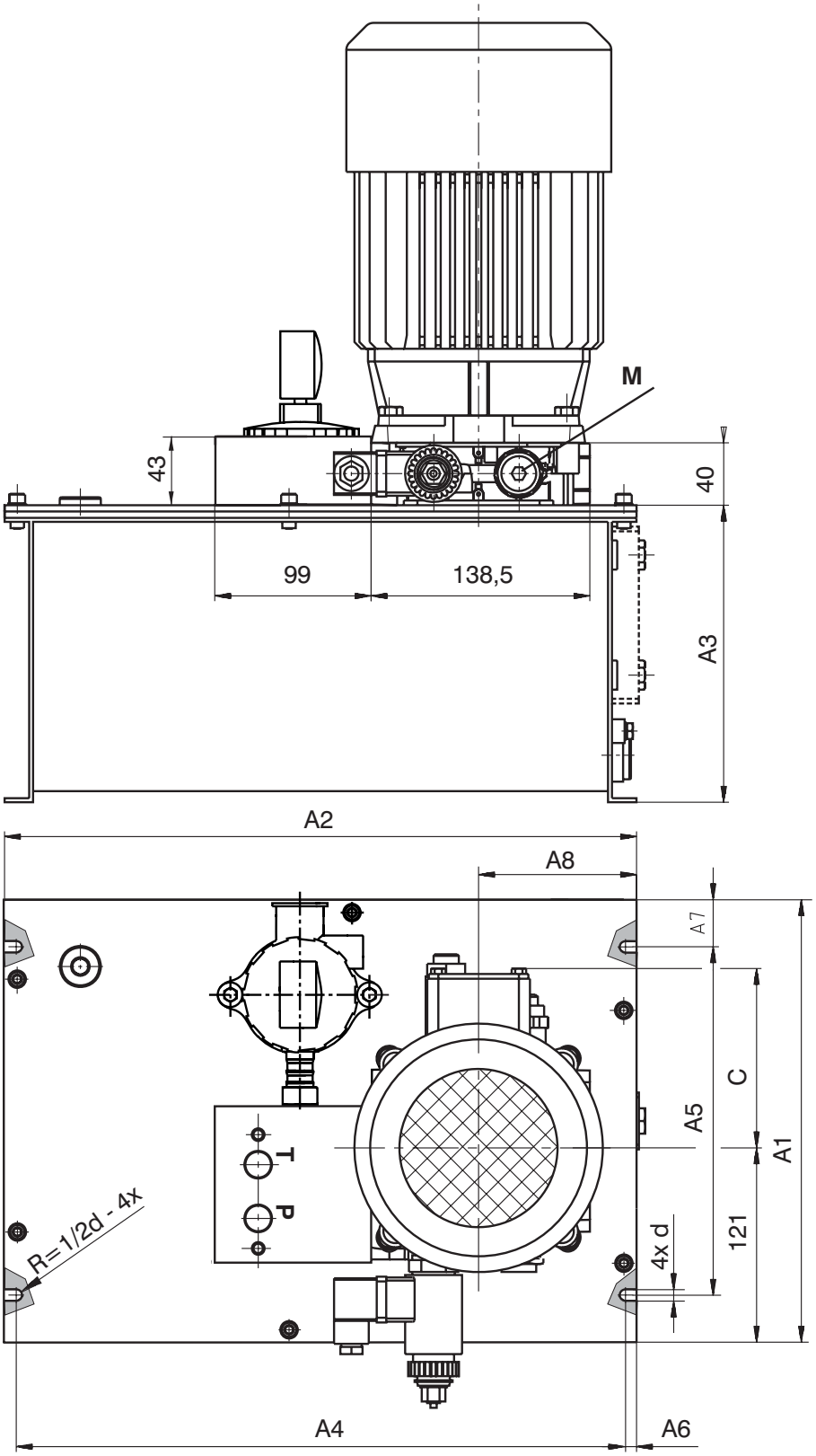

Dimensions C seehe page 10 - Table of Dimensions

Code of the tank	Capacity in [L]	Working volume [L]	A1	A2	A3	A4	A5	A6	A7	A8	d
56 (sheet)	8	4,5	280	340	165	319	220	10,5	30	100	9
57 (sheet))	10	8	280	400	188	388	220	6	30	100	9
58 (sheet)	20	16	280	400	276	388	220	6	30	100	9
59 (sheet)	30	24	320	500	287	479	260	9,5	30	132	11
60 (sheet)	40	34	320	500	366	479	260	9,5	30	132	11

Valve Dimensions

Dimensions in millimeters

Power pack with cylindrical sheet tank - with DC electric motor out return line filter

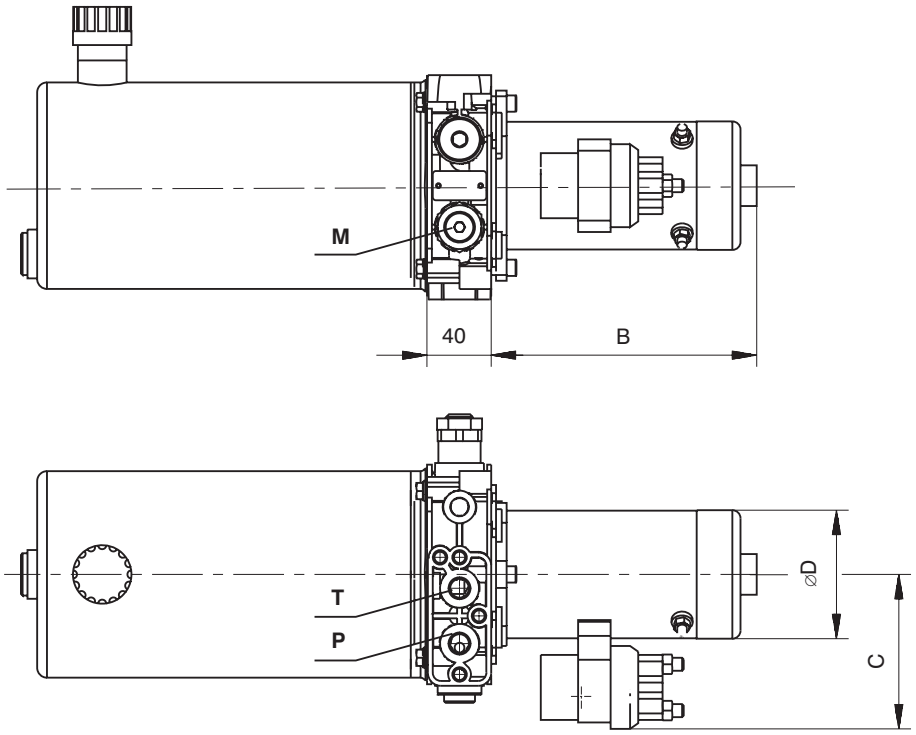

Power pack with square sheet tank - with DC electric motor out return line filter

Optional stacking assembly, versions B, E ref. page 12.

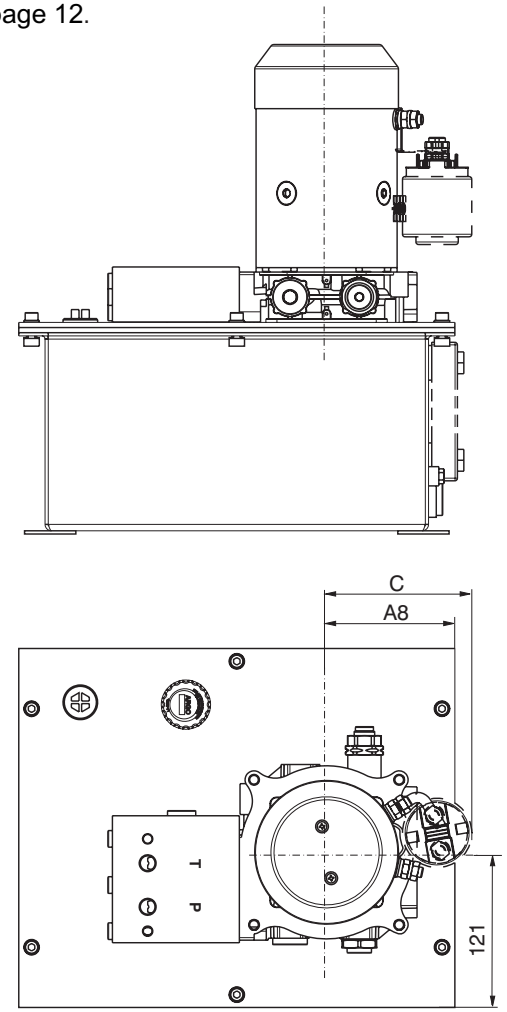

Dimensions B, C, ⌀D seehe page 10 - Table of Dimensions
Dimensions A8 seehe page 15

SMA 05 - Ilustration Figure

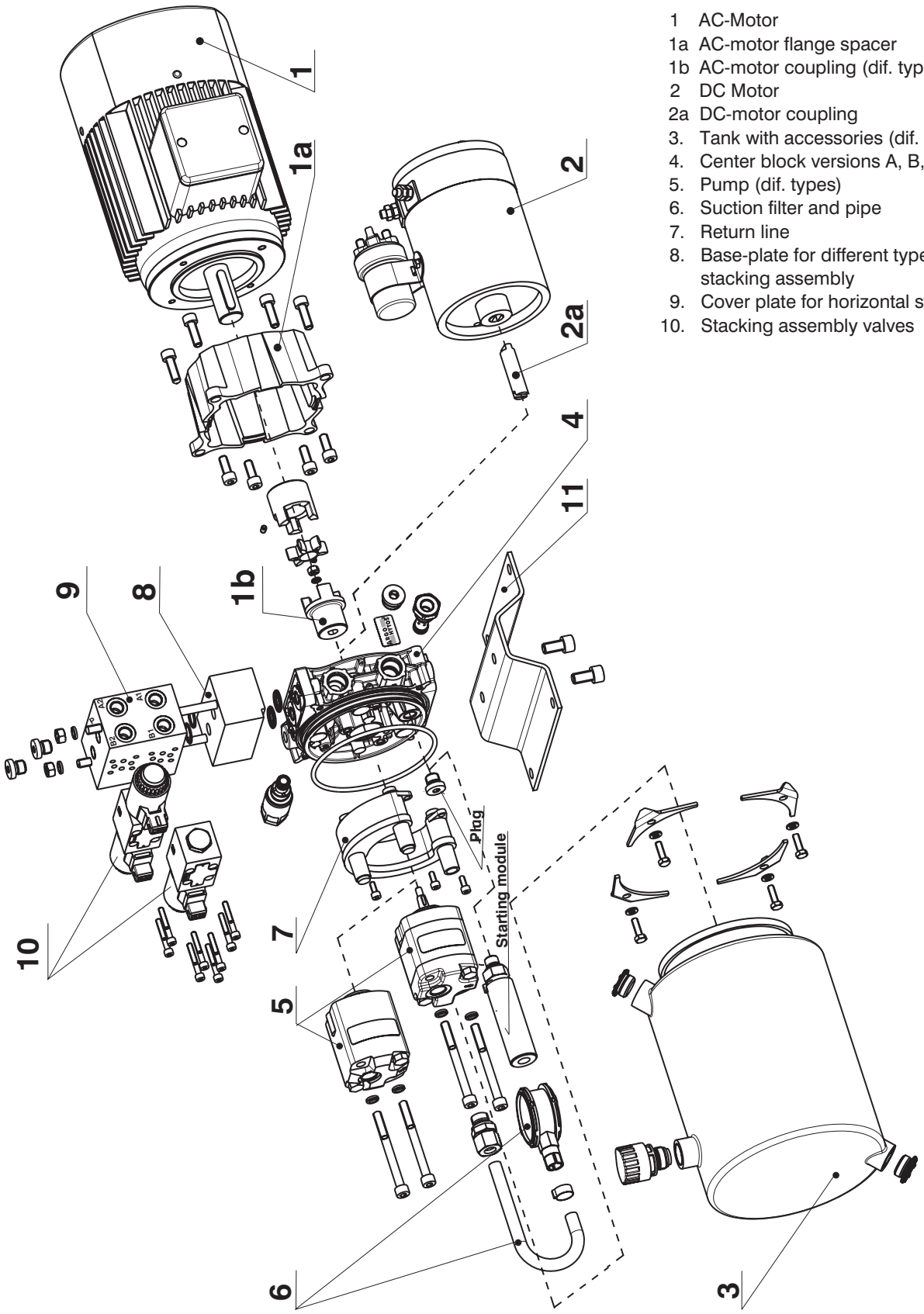

1 AC-Motor
1a AC-motor flange spacer
1b AC-motor coupling (dif. types)
2 DC Motor
2a DC-motor coupling
3. Tank with accessories (dif. types)
4. Center block versions A, B, C, D, E
5. Pump (dif. types)
6. Suction filter and pipe
7. Return line
8. Base-plate for different types of stacking assembly
9. Cover plate for horizontal stacking
10. Stacking assembly valves

Caution!

- The packing foil is recyclable.
- The technical information regarding the product presented in this catalogue is for descriptive purposes only. It should not be construed in any case as a guaranteed representation of the product properties in the sense of the law.

ARGO-HYTOS s.r.o. CZ - 543 15 Vrchlabí
Tel.: +420-499-403111, Fax: +420-499-403421
E-mail: sales.cz@argo-hytos.com
www.argo-hytos.com